BeneFusion nVP
BeneFusion nVP ex
BeneFusion nVP Neo

Infusion Pump

Operator’s Manual

CE 2797

© Copyright 2024-2026 Shenzhen Mindray Scientific Co., Ltd. All rights reserved.

Release date: April 2026

Revision: 7.0

Intellectual Property Statement

SHENZHEN MINDRAY SCIENTIFIC CO., LTD. (hereinafter called Mindray Scientific) owns the intellectual property rights to this product and this manual. This manual may refer to information protected by copyrights or patents and does not convey any license under the patent rights of Mindray Scientific, nor the rights of others.

Mindray Scientific intends to maintain the contents of this manual as confidential information. Disclosure of the information in this manual in any manner whatsoever without the written permission of Mindray Scientific is strictly forbidden.

Release, amendment, reproduction, distribution, rental, adaptation, translation of this manual in any manner whatsoever without the written permission of Mindray Scientific is strictly forbidden.

mindray, MINDRAY, MINDRAY, and BeneFusion are the registered trademarks or trademarks owned by Mindray in China and other countries. Mindray Scientific is authorized by Mindray to use above registered trademarks or trademarks.

Responsibility on the Manufacturer Party

Contents of this manual are subject to changes without prior notice.

All information contained in this manual is believed to be correct. Mindray Scientific shall not be liable for errors contained herein nor for incidental or consequential damages in connection with the furnishing, performance, or use of this manual.

Mindray Scientific is responsible for the effects on safety, reliability and performance of this product, only if:

- all installation operations, expansions, changes, modifications and repairs of this product are conducted by Mindray Scientific authorized personnel;
- the electrical installation of the relevant room complies with the applicable national and local requirements;
- the product is used in accordance with the instructions for use.

Warranty

THIS WARRANTY IS EXCLUSIVE AND IS IN LIEU OF ALL OTHER WARRANTIES, EXPRESSED OR IMPLIED, INCLUDING WARRANTIES OF MERCHANTABILITY OR FITNESS FOR ANY PARTICULAR PURPOSE.

Exemptions

Mindray Scientific's obligation or liability under this warranty does not include any transportation or other charges or liability for direct, indirect or consequential damages or delay resulting from the improper use or application of the product or the use of parts or accessories not approved by Mindray Scientific or repairs by people other than Mindray Scientific authorized personnel.

This warranty shall not extend to

- Malfunction or damage caused by improper use or man-made failure.
- Malfunction or damage caused by unstable or out-of-range power input.
- Malfunction or damage caused by force majeure such as fire and earthquake.
- Malfunction or damage caused by improper operation or repair by unqualified or unauthorized service people.
- Malfunction of the instrument or part whose serial number is not legible enough.
- Others not caused by instrument or part itself.

Company Contact

Manufacturer:	Shenzhen Mindray Scientific Co., Ltd.
Address:	6/F, Bldg 2, 1203 Nanhuan Avenue, Yutang Block, Guangming District, 518106 Shenzhen, P.R.China
Website:	www.mindray.com
E-mail Address:	service@mindray.com
Tel:	+86 755 81888998
Fax:	+86 755 26582680

EC REP

EC-Representative:	Shanghai International Holding Corp. GmbH (Europe)
Address:	Eiffestraβe 80, 20537 Hamburg, Germany
Tel:	0049-40-2513175
Fax:	0049-40-255726

Summary of Safety and Clinical Performance (SSCP):	https://www.mindray.com/en/products/infusion-system/benefusion-n-series

Notification of Adverse Events

As a health care provider, you may report the occurrence of certain events to SHENZHEN MINDRAY SCIENTIFIC CO., LTD., and possibly to the competent authority of the Member state in which the user and / or patient is established.

These events, include device-related death and serious injury or illness. In addition, as part of our Quality Assurance Program, SHENZHEN MINDRAY SCIENTIFIC CO., LTD. requests to be notified of device failures or malfunctions. This information is required to ensure that SHENZHEN MINDRAY SCIENTIFIC CO., LTD. provides only the highest quality products.

Preface

Manual Purpose

This manual contains the instructions necessary to operate the product safely and in accordance with its function and intended use. Observance of this manual is a prerequisite for proper product performance and correct operation and ensures patient and operator safety.

This manual is based on the maximum configuration and therefore some contents may not apply to your product. If you have any question, please contact us.

This manual is an integral part of the product. It should always be kept close to the equipment so that it can be obtained conveniently when needed.

Intended Audience

This manual is geared for clinical professionals who are expected to have a working knowledge of medical procedures, practices and terminology as required for monitoring of critically ill patients.

Illustrations

All illustrations in this manual serve as examples only. They may not necessarily reflect the setup or data displayed on your equipment.

Conventions

- ***Italic text*** is used in this manual to quote the referenced chapters or sections.
- ***Bold text*** is used to indicate the screen texts.
- → is used to indicate operational procedures.

Contents

1 Safety ..... 1 - 1

1.1 Safety Information ..... 1 - 1

1.1.1 Warnings ..... 1 - 1
1.1.2 Cautions ..... 1 - 3
1.1.3 Notes ..... 1 - 4

1.2 Equipment Symbols ..... 1 - 4

2 Equipment Introduction ..... 2 - 1

2.1 Intended Use ..... 2 - 1

2.1.1 Intended Purpose Statement ..... 2 - 1
2.1.2 Indication for Use ..... 2 - 1
2.1.3 Intended Users ..... 2 - 1
2.1.4 Intended Patient Population ..... 2 - 1
2.1.5 Intended Medical Conditions ..... 2 - 2
2.1.6 Contra-indications ..... 2 - 2
2.1.7 Side-effects ..... 2 - 2

2.2 Clinical Benefit ..... 2 - 2

2.3 Applied Part ..... 2 - 2

2.4 Main Unit ..... 2 - 3

2.4.1 Front View ..... 2 - 3
2.4.2 Rear View ..... 2 - 5
2.4.3 Bottom View ..... 2 - 6

2.5 Screen Display ..... 2 - 6

2.5.1 On-screen Symbols ..... 2 - 7
2.5.2 Menus ..... 2 - 8
2.5.3 Operation Keys ..... 2 - 9
2.5.4 Using the Touchscreen ..... 2 - 10
2.5.5 Using the On-Screen Keyboard ..... 2 - 11

3 Equipment Preparation ..... 3 - 1

3.1 Equipment Preparation Safety Information ..... 3 - 1

3.2 Environmental Requirements ..... 3 - 2

3.3 Installation ..... 3 - 2

3.3.1 Pole Clamp Installation ..... 3 - 2
3.3.2 Stack Rack Installation ..... 3 - 3
3.3.3 Transport Bracket Installation ..... 3 - 3
3.3.4 Installing the Drop Sensor ..... 3 - 4

3.4 Setting Up the Equipment ..... 3 - 5

3.4.1 Connecting the AC Mains ..... 3 - 5
3.4.2 Connecting the DC Power Source ..... 3 - 6
3.4.3 Charging the Battery ..... 3 - 6
3.4.4 Adjusting the Screen Brightness ..... 3 - 7

3.4.5 Setting the Date and Time ..... 3 - 7
3.4.6 Enabling Password Protection for Unlocking Screen ..... 3 - 7

4 Getting Started ..... 4 - 1

4.1 Quick Start Guide ..... 4 - 1
4.2 Setting Up the Pump ..... 4 - 1
4.3 Preparing the IV Container ..... 4 - 2
4.4 Loading the Infusion Set ..... 4 - 2
4.5 Starting Infusion ..... 4 - 3
4.6 Purge ..... 4 - 4
4.7 Bolus Infusions ..... 4 - 5
4.7.1 Setting the Bolus Rate ..... 4 - 5
4.7.2 Automatic Bolus Infusion ..... 4 - 5
4.7.3 Manual Bolus Infusion ..... 4 - 6
4.7.4 Setting the Bolus Volume Unit ..... 4 - 6
4.8 Changing the Infusion Parameters ..... 4 - 7
4.9 Pausing the Infusion ..... 4 - 7
4.10 Setting Keep Vein Open (KVO) Rate ..... 4 - 7
4.11 Replacing the IV Container ..... 4 - 8
4.12 Unloading the Infusion Set ..... 4 - 8
4.13 Managing Secondary Infusion ..... 4 - 9
4.13.1 Preparing the Primary and Secondary IV Containers ..... 4 - 9
4.13.2 Setting the Parameters for Primary and Secondary Infusions ..... 4 - 10
4.13.3 Starting Secondary Infusion ..... 4 - 11
4.13.4 Stopping Secondary and Primary Infusions ..... 4 - 11
4.13.5 Switching to Primary or Secondary Infusion ..... 4 - 11
4.14 Viewing the Infused Volume ..... 4 - 12
4.15 Entering the Standby Mode ..... 4 - 13
4.16 Turning Off the Pump ..... 4 - 13

5 Using the Dock ..... 5 - 1

5.1 Securing the Pump in the Dock ..... 5 - 1
5.2 Relay Infusion ..... 5 - 2
5.2.1 Setting up a Relay Infusion ..... 5 - 2
5.2.2 Smooth Relay Infusion ..... 5 - 3
5.2.3 Canceling the Relay ..... 5 - 5
5.3 Performing Prescription ..... 5 - 5
5.4 Configuring Pumps in Batches through the Dock ..... 5 - 6
5.5 Setting Remote Control ..... 5 - 6

6 Alarms ..... 6 - 1

6.1 Alarm Safety Information ..... 6 - 1
6.2 Understanding the Alarms ..... 6 - 1
6.2.1 Alarm Priorities ..... 6 - 1

6.2.2 Alarm Indicators ..... 6 - 2
6.2.3 Alarm Screen ..... 6 - 2
6.3 Resetting Alarms ..... 6 - 3
6.4 Pausing Alarm Sound ..... 6 - 3
6.5 Setting the Alarm Sound ..... 6 - 4
6.5.1 Setting the Alarm Volume ..... 6 - 4
6.5.2 Setting the Alarm Sound Mode ..... 6 - 5
6.6 Nurse Call ..... 6 - 5
6.7 Alarm Solutions ..... 6 - 6
6.8 Occlusion Alarm ..... 6 - 10

7 Menu Options ..... 7 - 1
7.1 Main Menu Options ..... 7 - 1
7.2 General Option ..... 7 - 1
7.3 Department Management ..... 7 - 6
7.4 System Options ..... 7 - 6

8 Infusion Modes ..... 8 - 1
8.1 Rate Mode/Time Mode ..... 8 - 1
8.2 Drip Mode ..... 8 - 2
8.3 Dose Mode ..... 8 - 2
8.4 Loading Dose Mode ..... 8 - 3
8.5 Micro-infusion Mode ..... 8 - 3
8.6 Sequential Mode ..... 8 - 4
8.6.1 Adding/Deleting Sequences ..... 8 - 4
8.6.2 Changing the Infusion Parameters ..... 8 - 4
8.7 Intermittent Mode ..... 8 - 5
8.8 Ramp Mode ..... 8 - 5
8.9 Dose Time Mode ..... 8 - 6

9 Drug Library/Drug Info Library ..... 9 - 1
9.1 License ..... 9 - 1
9.1.1 Checking the Licenses ..... 9 - 1
9.1.2 Installing the Licenses ..... 9 - 2
9.2 Importing the Drug Library/Drug Info Library ..... 9 - 2
9.3 Dose Error Reduction Systems (DERS) ..... 9 - 3
9.3.1 Hard Limits ..... 9 - 3
9.3.2 Soft Limits ..... 9 - 3
9.4 Predefining the Infusion Mode ..... 9 - 3

10 Managing Patient ..... 10 - 1
10.1 Discharging/Admitting a Patient ..... 10 - 1
10.2 Inputting/Editing Patient Information ..... 10 - 1

10.3 Exporting Patient Information ..... 10 - 2
10.4 Importing Patient Information ..... 10 - 2

11 Networked Communication ..... 11 - 1

11.1 Network Safety Information ..... 11 - 1
11.2 Connecting the Equipment to the nCS / CMS ..... 11 - 1
11.3 Connecting the Equipment to the Control Software ..... 11 - 2
11.4 Connecting the Equipment to the Anesthesia System ..... 11 - 3
11.5 Connecting the Equipment to the Monitor ..... 11 - 3
11.6 Connecting the Equipment to the eGateway ..... 11 - 3
11.7 Controlling the Equipment Remotely ..... 11 - 3

12 Password Protected Settings ..... 12 - 1

12.1 Accessing the User Maintenance Menu ..... 12 - 1
12.2 The Device Management Settings ..... 12 - 1
12.3 The Patient Information Settings ..... 12 - 2
12.4 System Calibration ..... 12 - 2
12.5 Network Setup ..... 12 - 3
12.5.1 The WLAN Settings ..... 12 - 3
12.5.2 The WLAN IP Settings ..... 12 - 3
12.5.3 The Central Station Setup ..... 12 - 3
12.5.4 The Device Discover Settings ..... 12 - 3
12.5.5 The Cert Manage Settings ..... 12 - 4
12.6 The Remote Control Settings ..... 12 - 4
12.7 The Brand Management ..... 12 - 5
12.8 The Time and Language Settings ..... 12 - 5
12.9 The Neonate Configurations ..... 12 - 6
12.10 The Parameter Switch Settings ..... 12 - 6
12.11 The Unit Settings ..... 12 - 6
12.12 The Alarm Settings ..... 12 - 7
12.13 The Bolus Volume Unit Setting ..... 12 - 7
12.14 The Bolus Limit Settings ..... 12 - 7
12.15 The Purge Limit Setting ..... 12 - 8
12.16 The Prescription Setup ..... 12 - 8
12.17 The Parameter Memory Setting ..... 12 - 8
12.18 The Loading Guide Setting ..... 12 - 9
12.19 The Brand Selection Setting ..... 12 - 9
12.20 The Auto-Restart Setting ..... 12 - 9
12.21 The Drug Selection Popup Setting ..... 12 - 9
12.22 The Department Management ..... 12 - 9
12.23 The Drop Sensor Setting ..... 12 - 10
12.24 The KVO Setting ..... 12 - 10
12.25 The Concentration Setting ..... 12 - 10

12.26 Enabling Password Unlock ..... 12 - 10
12.27 Modifying the Password ..... 12 - 11
12.28 Import and Export ..... 12 - 11
12.29 License ..... 12 - 11
12.30 Viewing the Version Information ..... 12 - 12
12.31 The Maintenance Prompt Settings ..... 12 - 12

13 Maintenance ..... 13 - 1

13.1 Maintenance Safety Information ..... 13 - 1
13.2 Maintenance and Testing Schedule ..... 13 - 2
13.3 Testing Methods and Procedures ..... 13 - 2
13.3.1 Performing Visual Inspection ..... 13 - 3
13.3.2 Performing Power-on Test ..... 13 - 3
13.3.3 Checking the Battery ..... 13 - 3
13.4 Maintaining the Battery ..... 13 - 3
13.4.1 Battery Safety Information ..... 13 - 4
13.4.2 Installing the Battery ..... 13 - 4
13.4.3 Charging the Battery ..... 13 - 5
13.4.4 Conditioning the Battery ..... 13 - 5
13.5 Checking Version Information ..... 13 - 6
13.6 Checking the History Record ..... 13 - 6
13.7 Exporting the History Record ..... 13 - 6
13.8 Disposing of the Equipment ..... 13 - 7

14 Care and Cleaning ..... 14 - 1

14.1 Care and Cleaning Safety Information ..... 14 - 1
14.2 Cleaning the Equipment ..... 14 - 2
14.3 Disinfecting the Equipment ..... 14 - 2
14.4 Cleaning the Pole Clamp, Stack Rack and DC Adapter ..... 14 - 5
14.5 Disinfecting the Pole Clamp, Stack Rack and DC Adapter ..... 14 - 5
14.6 Sterilization ..... 14 - 6
14.7 Impact of Improper Cleaning ..... 14 - 6

15 Accessories ..... 15 - 1

A Product Specifications ..... A - 1

A.1 Classifications ..... A - 1
A.2 Environmental Specifications ..... A - 1
A.3 Power Supply Specifications ..... A - 3
A.3.1 External Power Supply Specifications ..... A - 3
A.3.2 Battery..... A - 4
A.4 Physical Specifications ..... A - 4

A.5 Hardware Specifications ..... A - 4
A.5.1 Displays ..... A - 4
A.5.2 LEDs ..... A - 4
A.5.3 Audio Indicator ..... A - 5
A.5.4 Interface Specifications ..... A - 5
A.5.5 Signal Output Specifications ..... A - 5
A.6 Wireless Network ..... A - 5
A.7 Infusion Specifications ..... A - 6
A.8 Recommended Infusion Sets ..... A - 8
A.9 Occlusion Alarm Delay and Bolus Volume ..... A - 8
A.10 Infusion Accuracy Graphs ..... A - 9
A.10.1 Infusion Accuracy at 1 ml/h ..... A - 9
A.10.2 Infusion Accuracy at 25ml/h ..... A - 11
A.11 Operating Environment ..... A - 12

B EMC and Radio Regulatory Compliance ..... B - 1
B.1 EMC ..... B - 1
B.2 Radio Regulatory Compliance ..... B - 10

C Abbreviations ..... C - 1

D Control Software Use Guide ..... D - 1
D.1 Safety Information ..... D - 1
D.1.1 Warnings ..... D - 1
D.1.2 Cautions ..... D - 2
D.2 Overview ..... D - 3
D.2.1 Interface ..... D - 3
D.2.2 Access Control ..... D - 3
D.2.3 Software and Hardware Requirements ..... D - 4
D.2.4 User Error Prevention ..... D - 4
D.2.5 Specifications ..... D - 4
D.3 Equipment Preparation ..... D - 5
D.3.1 Equipment Preparation Safety Information ..... D - 5
D.3.2 Installation ..... D - 5
D.3.3 Starting the Software ..... D - 6
D.3.4 Setting Network Connection ..... D - 6
D.3.5 Viewing System Information ..... D - 6
D.3.6 Closing the Software ..... D - 6
D.3.7 Uninstallation ..... D - 7
D.4 Remote Control ..... D - 7
D.4.1 Remotely Controlling the Pump ..... D - 7
D.5 Alarms ..... D - 8
D.5.1 Safety Information ..... D - 8
D.5.2 Understanding the Alarms ..... D - 8
D.5.3 Viewing Alarms ..... D - 9

D.5.4 Resetting Alarms ..... D - 9
D.5.5 Pausing Alarm Sound ..... D - 9
D.6 System Setup ..... D - 9
D.7 Maintenance ..... D - 10
D.8 Troubleshooting ..... D - 10

E Declaration of Conformity ..... E - 1

This page intentionally left blank.

1 Safety

1.1 Safety Information

WARNING

- **Indicates a potential hazard or unsafe practice that, if not avoided, could result in death, serious injury or damage to product/property.**

CAUTION

- **Indicates a potential hazard or unsafe practice that, if not avoided, could result in minor personal injury, product malfunction or damage to product/ property.**

NOTE

- **Provides application tips or other useful information to ensure that you get the most out of the product.**

1.1.1 Warnings

WARNING

- **Ensure that this device is operated in accordance with the requirements, procedures, warnings, and precautions outlined in this manual. Failure to do so may result in infusion abnormalities, underdosing/overdosing, or other potential risks.**
- **To avoid risk of electric shock, the equipment must only be connected to mains power with protective earth. If a protective earth conductor is not provided, operate it on battery power, if possible.**
- **To avoid explosion hazard, do not use the equipment in the presence of oxygen-rich atmospheres, flammable anesthetics, or other flammable agents.**
- **The equipment is not intended to be used within the Magnetic Resonance (MR) environment.**

- **The equipment can be used in the MR environment only after the equipment is secured in the BeneFusion MRI Station MRI Infusion Workstation. Do not use the drop sensor while inside the MR environment.**
- **Do not use the equipment with a patient when the road ambulance is connected to the vehicle charging device.**
- **Do not use the multiple portable socket outlets (MPSO) or AC mains extension cords. Ensure that the sum of the individual ground leakage currents does not exceed the allowable limits.**
- **Do not open the equipment housings. All servicing and future upgrades must be carried out by trained and authorized personnel. Moreover, the servicing must be done only after the AC power supply is disconnected.**
- **Do not place the equipment or accessories in any position that might cause it to fall on the patient.**
- **Do not transfer the device by lifting/carrying the door.**
- **Do not start an infusion unless the setup was verified to be correct.**
- **Set the VTBI before starting the infusion, or use the drop sensor to monitor the infusion. If the VTBI is not set before infusion, and the drop sensor is not connected, pay special attention to the infusion status (such as IV container empty) during the infusion.**
- **To reduce the risk of undesired alarms or inaccurate flow rate, please do not change the height of the device or IV container during infusion.**
- **When using this equipment for intravenous infusion, do not use enteral feeding sets or select "Enteral Nutrition" as the drug type. Otherwise, air alarms may not be detected.**
- **When using this equipment for enteral nutrition, do not use enteral fluids for intravenous infusion. Otherwise, this may cause serious injury or death to patient.**
- **When using this equipment for enteral nutrition, use only the specified nutritional fluids. Use the commercially available enteral nutritional solutions prepared by the manufacturer. If homemade blenderized or liquidized foods are used, they contain chunks, seeds, or lumps that may affect the infusion function of the pump. If you have any problems on enteral nutrition infusion, verify with our professionals.**
- **To avoid inadvertent disconnection, route all cables in a way to prevent a stumbling hazard. Wrap and secure excess cabling to reduce risk of entanglement by patients or personnel.**
- **Clearing the occlusion result from line kinks, filter coagulation, etc. may cause extra bolus to patients. Appropriate measures should be taken.**
- **Do not touch the patient and device connectors simultaneously. Otherwise leakage current may result in patient injury.**

- **Mutual interferences are unable to be ruled out when several pumps/ infusion lines are connected (smooth relay infusion).**
- **Ensure that the downstream pumps are ready for infusion when infusing high risk drugs.**
- **Always keep the patient's vital signs under close surveillance when infusing high risk drugs.**
- **Keep a distance of at least 20 cm away from the patient when operating the pump. Otherwise, there may be a risk of mistakenly touching the touchscreen.**
- **Keep a distance of at least 30 cm away from the devices with higher interference signals, such as HF instruments, their accessories and cables, and other electrosurgical instruments, mobile phones and other microwave equipments.**
- **To avoid electric shock, do not touch patient and other non-defibrillation proof equipments during defibrillation. Defibrillation will not affect the performance of the equipment.**

1.1.2 Cautions

CAUTION

- **When several infusion lines are connected to the same vascular access, there may be back flow or prolonged response time of occlusion alarm. Therefore, use check valve at the line end or follow local hospitals' instructions while in connection with other infusion system.**
- **Ensure that the equipment is supplied with continuous electric power during work. Sudden power failure may cause data loss.**
- **Electromagnetic fields may affect equipment performance. This makes it necessary for other equipment used in the vicinity of this equipment to meet EMC standards. Mobile phones, X ray and MRI equipment are all potential interference sources because of their high-intensity electromagnetic radiation.**
- **Always install or carry the equipment properly to avoid damage caused by drop, impact, strong vibration or other mechanical force. The equipment should be observed to verify normal operation after fall, otherwise it cannot be used.**
- **Dry the equipment immediately in case of rain or water spray.**
- **Some settings are password protected and can only be changed by authorized personnel. Contact your department manager or biomedical engineering department for the passwords used at your facility.**

1.1.3 Notes

NOTE

- **It is recommended to prepare a backup device before the infusion of high risk drugs.**
- **If this device fail to function as prescribed in this manual (e.g. loose, damaged or broken components), stop using the device immediately and report the incidents of the malfunction (e.g. infusion set used, infusion parameter settings, serial number (SN), type of liquid infused, etc.) to the distributor or service personnel.**
- **The software was developed in compliance with IEC62304.**
- **The equipment provides power-down storage. Alarms limit setting and history record are saved and will be maintained if the equipment is powered down suddenly. The storage time is equals to the equipment's service life. The alarm limit settings before power-down are reloaded when the equipment is restarted.**
- **This manual describes all features and options. Your equipment may not have all of them.**

1.2 Equipment Symbols

Some symbols may not appear on your equipment.

	Refer to instruction manual/ booklet		Caution
	Alternating current		Input/output
	Battery		USB connector
	Both direct and alternating current		Direct current
	Date of manufacture		Manufacturer

IP33	Protected against solid foreign objects with a diameter no less than 2.5 mm in diameter. Protected against spraying liquid water.		DEFIBRILLATION-PROOF TYPE CF APPLIED PART
	Atmospheric pressure limitations		Humidity limitations
	THIS WAY UP		Keep dry
	Fragile, handle with care		STACKING LIMIT BY NUMBER
	Dispose of in accordance to your country's requirements	EC REP	Authorized representative in the European Community
	General warning sign		Stop
	Stand-by		Non-ionizing electromagnetic radiation
	Temperature limitations	UDI	Unique Device Identifier
SN	Serial number	MD	Medical Device
	CLASS II equipment		
CE 2797	The product bears CE mark indicating its conformity with the provisions of the REGULATION (EU) 2017/745 on medical devices and fulfills the general safety and performance requirements of Annex I of this regulation. Note: The product complies with the Council Directive 2011/65/EU.		

The general meaning assigned to geometric shapes, safety colors and contrast colors for safety signs are as follows:

Geometric shape	Meaning	Safety color	Contrast color	Graphical symbol color
	Mandatory action	Blue	White	White
	Warning	Yellow	Black	Black

2 Equipment Introduction

2.1 Intended Use

2.1.1 Intended Purpose Statement

The infusion pump is intended for use for the delivery of medications, solutions, nutrition, lipids, blood and blood components indicated for infusion therapy.

WARNING

- **This pump is intended for use only by clinical professionals or under their guidance. It must only be used by persons who have received adequate training in its use. Anyone unauthorized or untrained must not perform any operation on it.**
- **The clinical professionals shall ensure that the patient is infused according to the intended use specified in this manual. Otherwise, it may pose risks to the patient.**

NOTE

- **According to the conclusion of clinical evaluation and residual risk evaluation, for the intended patients, there is no known side effects that can occur during or after the use of the medical device. And there is no need for the operator to make extra preparations. Thus, no residual risk associated with using the medical device should be disclosed.**

2.1.2 Indication for Use

The infusion pump is for patients who need receive various types of medications, solutions, nutrition, lipids, blood and blood components in controlled amounts through an intravenous (IV) route or enteral route.

2.1.3 Intended Users

The infusion pump is intended to be used by trained healthcare professionals.

2.1.4 Intended Patient Population

The Infusion pump is intended for use on adult, pediatric and neonate. The BeneFusion nVP Neo is intended for pediatrics and neonates only.

2.1.5 Intended Medical Conditions

The infusion pump is intended to be used in professional healthcare facilities as well as in medical ground and air transport situations (road ambulances and rotary-wing air ambulances).

2.1.6 Contra-indications

None.

2.1.7 Side-effects

None.

2.2 Clinical Benefit

The infusion pump allows administration of medications, solutions, nutrition, lipids, blood and blood components accurately and continuously through an intravenous (IV) route or enteral route.

2.3 Applied Part

The applied part of the equipment is the part of the infusion set that comes into physical contact with the patient.

2.4 Main Unit

2.4.1 Front View

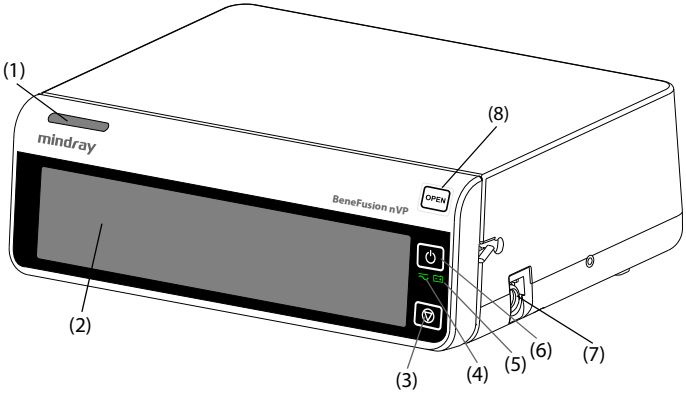

(1) Alarm light
When an alarm occurs, this lamp lights and flashes corresponding with the alarm priority:
- High priority alarms: the lamp quickly flashes red.
- Low priority alarms: the lamp lights in yellow without flashing.

(2) Display

(3) Stop key
When an emergency happens during an infusion and unlocking the touchscreen fails, press this key to stop infusion.

(4) External power LED
- On: when external power supply is connected.
- Off: when external power supply is not connected.

(5) Battery LED
- Green: the battery is being charged.
- Flashing green: the pump runs on battery power.
- Off: no battery is installed, or no external power is connected when the equipment is off.

(6) Power switch

(7) Drop sensor connector
Connects the drop sensor.

(8) Door opening key
Pressing this key opens the pump door.

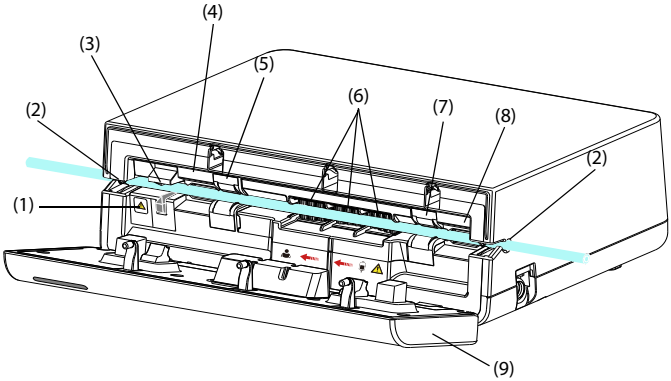

(1) Anti free-flow clamp indicator
Indicates the state of the anti free-flow clamp. The indicator flashes when the anti free-flow clamp is open or malfunctions.

(2) Tubing channel notches
Secures the infusion set.

(3) Anti free-flow clamp
Occludes the tubing.

(4) Downstream pressure sensor
Detects the downstream pressure in the infusion set.

(5) Downstream air in line sensor
Detects air in the infusion set.

(6) Pumping Mechanism
Includes the pumping fingers and a waterproof membrane covering them to keep fluid from entering the mechanism.

(7) Upstream air in line sensor
Detects air in the infusion set.

(8) Upstream pressure sensor
Detects the upstream pressure in the infusion set.

(9) Door
Open the door to load or unload the infusion set.

2.4.2 Rear View

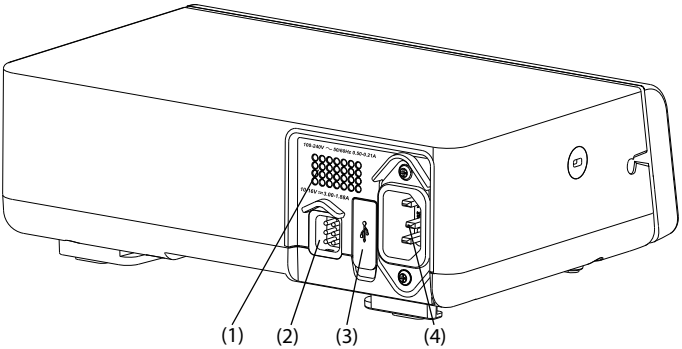

(1) Speaker
Provides sound for audible alarms and reminder.

(2) Multi-functional connector
- Connects the equipment to the hospital's nurse call system through the nurse call cable.
- Uses as a DC power input connector when the equipment is connected to the dock.
- Uses as a RS232 connector for connecting the external devices.

(3) USB connector
Connects the USB device.

(4) AC power input connector
Connects the AC power cord.

2.4.3 Bottom View

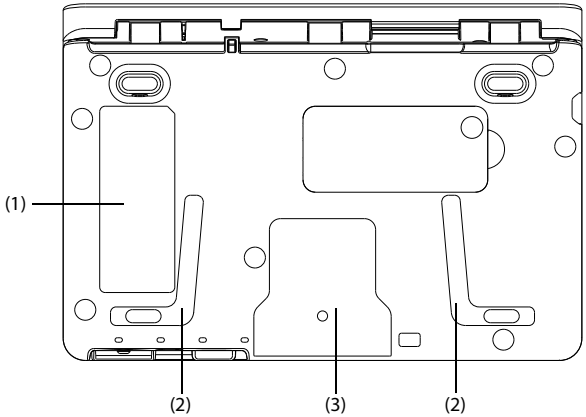

(1) Product label

(2) Placement area for stacking pumps
This area is for stacking the pumps with the handle.

(3) Placement area for pole clamp
This area is for mounting the pump to a pole clamp.

2.5 Screen Display

The screen may look slightly different in different infusion modes. The following figure shows the infusion screen of the rate mode:

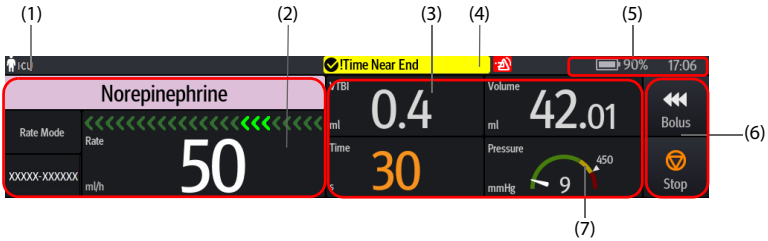

(1) Patient information area
Displays applied department, patient category, gender, bed number, and patient name.

(2) Infusion status area
Displays the infusion mode, brand information, drug name (and concentration if a fixed concentration is configured), infusion progress bar, and major infusion parameters.

(3) Infusion status area
Displays other infusion parameters and pressure status.

(4) Alarm information area
Displays the alarm status, alarm message or prompt message, and alarm symbol.

(5) System status information area
Displays the battery status, network status, relayed status, system time, and activation status. For more information, see *2.5.1 On-screen Symbols*.

(6) Key area
Displays keys. For more information, see *2.5.3 Operation Keys*.

(7) Pressure status area
Displays the real-time pressure status.
- Green: Pressure is normal.
- Yellow: Pressure is near the threshold for the infusion.
- Red: Pressure is beyond the threshold for the infusion.

2.5.1 On-screen Symbols

The following table lists the on-screen symbols:

Symbol	Description	Symbol	Description
	Adult, male		Adult, female
	Pediatric, male		Pediatric, female
	Neonate, male		Neonate, female
	Audible alarm tones are paused.		Alarms are acknowledged and the alarm is reset.
	Alarms are acknowledged and the reminder sound is given.		Audible alarm tones are turned off.

Symbol	Description	Symbol	Description
	Wireless network is connected. The solid part indicates network signal strength.		Wireless network is not connected.
	Customized relay		Circular relay
	The battery works correctly. The solid portion represents the remaining charge.		The battery is being charged.
	The battery has low power and needs to be charged.		The battery has critically low charge and needs to be charged immediately. Otherwise, the equipment will automatically shut down.
	No battery is installed.		Battery fault, battery communication fault, or battery charging fault. Contact service personnel for help.
	The configuration file is pending for activation.		The drug library file is pending for activation.
		Night mode	
		Green running bar: indicates an ongoing infusion.	
		Blue running bar: indicates a bolus dose or line purge.	

2.5.2 Menus

All menus have similar style and structure, see the figure below:

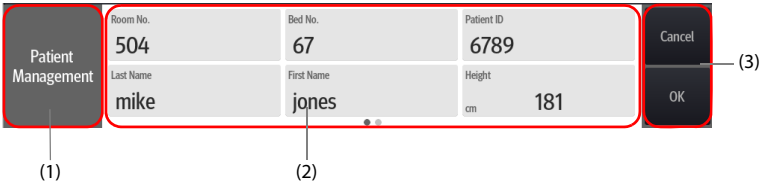

(1) Menu heading

(2) Submenu tabs or menu options

(3) Operation buttons

2.5.3 Operation Keys

The equipment provides operation keys for you to access some functions. The following table shows available operation keys.

Symbol	Label	Function	Symbol	Label	Function
	AudioPause	Pauses alarm sound.		AlarmReset	Acknowledges the ongoing alarms.
	Lock	Locks the touchscreen.		Relay	Enters the **Relay** menu.
	Standby	Enters Standby.		Purge	Initiate a purge.
	Volume	Enters the **Volume** menu.		Menu	Enters the **Menu**.
	Link Code	Enters the **Link Code** menu.		End Prescription	Ends the current prescription.
	Exit	Returns to the main screen.		Bolus	Enters the bolus parameter setup screen.
	Manual	Initiate a manual bolus infusion.		Bolus	Initiate an automatic bolus infusion.

Symbol	Label	Function	Symbol	Label	Function
	Start	Starts an infusion.		Stop	Pauses an infusion.
	Back	Returns to the previous screen or the parameter setup screen.		Home	Returns to the main screen.
	Setup	Enters the **Standby Time** setup menu or the parameter setup screen.		Cancel	Cancels the shutdown and returns to the main screen.
	Turn Off	Turns off the pump.		Standby	Enters Standby.
	Extension key	Fold or unfold a menu		Applied Dept.	Enters the **Applied Department** menu.
	Secondary	If is highlighted in green: during an infusion, it indicates that the current screen is the primary infusion screen; when the infusion is paused, press it to switch to the secondary infusion screen. If is highlighted in green: during an infusion, it indicates that the current screen is the secondary infusion screen; when the infusion is paused, press it to switch to the primary infusion screen.			

2.5.4 Using the Touchscreen

You can use the touchscreen to select a screen element by pressing directly on the pump's screen.

To avoid misuse, the touchscreen is locked automatically if no operation is detected in the preset time. To manually lock the touchscreen, swipe the touchscreen from top down, and select **Lock**.

To unlock the touchscreen, select on the touchscreen and swipe the slider as instructed.

WARNING

- **To prevent unauthorized personnel operating the pump, please ensure that the touchscreen is locked when the pump is not under the supervision of clinical professionals.**

NOTE

- **Wipe off any water on the touchscreen in case of rain or water spray.**
- **If the touch screen is abnormal during infusion, please do not use the touchscreen to operate the pump, and contact your service technician.**

2.5.5 Using the On-Screen Keyboard

The on-screen keyboard enables you to enter information:

- Enter the information by selecting one character after another.
- Select the Backspace key to delete single characters.
- Select the Caps Lock key to switch uppercase letters and lowercase letters.
- Select the Enter key to confirm the entry and close the on-screen keyboard.
- Select the Space bar to enter a space.

This page intentionally left blank.

3 Equipment Preparation

3.1 Equipment Preparation Safety Information

WARNING

- **Use only installation accessories specified by Mindray Scientific.**
- **The equipment software copyright is solely owned by Mindray Scientific. No organization or individual shall resort to modifying, copying, or exchanging it or to any other infringement on it in any form or by any means without due permission.**
- **Connect only approved devices to this equipment. Devices connected to the equipment must meet the requirements of the applicable IEC standards (e.g. IEC 60950 safety standards for information technology equipment and IEC 60601-1 safety standards for medical electrical equipment). The system configuration must meet the requirements of the IEC 60601-1 medical electrical systems standard. Any personnel who connect devices to the equipment's signal input/output port are responsible for providing evidence that the safety certification of the devices has been performed in accordance to the IEC 60601-1. If you have any questions, please contact Mindray Scientific.**
- **If it is not evident from the equipment specifications whether a particular combination with other devices is hazardous, for example, due to summation of leakage currents, please consult the manufacturer or an expert in the field. A determination must be made that the proposed combination will not negatively affect the devices themselves or the patient's safety.**
- **Ensure that the equipment is properly secured and positioned. Position change and severe shock may lead to changes to the delivery accuracy.**

CAUTION

- **The equipment should be installed by the authorized personnel.**
- **Before use, verify whether the packages are intact. In case of any damage, do not apply it to patient.**

NOTE

- **Save the packing case and packaging material as they can be used if the equipment must be reshipped.**
- **This equipment is in accordance with the EN 1789:2020+A1:2023 and EN 13718-1:2014+A1:2020 standards. When the equipment is used for transporting a patient via road ambulances or rotary-wing air ambulances, it can only be powered by DC power supply.**

3.2 Environmental Requirements

The operating environment of the equipment must meet the requirements specified in this manual.

The environment where the equipment is used shall be reasonably free from noises, vibration, dust, corrosive, flammable, and explosive substances. Moreover, to maintain good ventilation, the equipment shall be at least 2 inches (5cm) away from around the cabinet.

When the equipment is moved from one place to another, condensation may occur as a result of temperature or humidity differences. In this case, never start the system before the condensation evaporates.

CAUTION

- **Make sure that the equipment operating environment meets the specific requirements. Otherwise unexpected consequences, e.g. damage to the equipment, could result.**

NOTE

- **The temperature of the fluid in the infusion line may be influenced by the pump's conditions (high ambient temperature, extremely low rate and poor ventilation). Always keep the vent clear during work. As for temperature sensitive drugs, refer to their instructions for use or manufacturer's instructions, and carefully evaluate the applicable temperature and rate of the drugs.**

3.3 Installation

3.3.1 Pole Clamp Installation

The pole clamp secures the pump to either a horizontal or vertical bar of the medical supply unit or IV pole. For detailed information on how to install the pole clamp, see *The Pole Clamp Installation Guide*.

WARNING

- **Do not lean on the pump after it is mounted to an IV pole using the pole clamp. Otherwise the pump may fall, causing personal injury.**
- **If the pump is mounted to an IV pole using the pole clamp, ensure the screw of the pole clamp is tightened. Otherwise the pump may fall, causing personal injury.**

3.3.2 Stack Rack Installation

Use a stack rack for pump transport or for stacking several pumps together. For detailed instructions on stack rack installation, see *The Stack Rack Installation Guide*.

NOTE

- **Check the medical supply unit and IV pole for stability before mounting the pumps.**
- **Install a single pole clamp to each pump before mounting the stacked pumps to the medical supply unit or IV pole.**
- **A maximum of three pumps can be stacked together when used with the stack rack.**

3.3.3 Transport Bracket Installation

The pump can be secured in the transport bracket after it is mounted to a road ambulance or rotary-wing air ambulance.

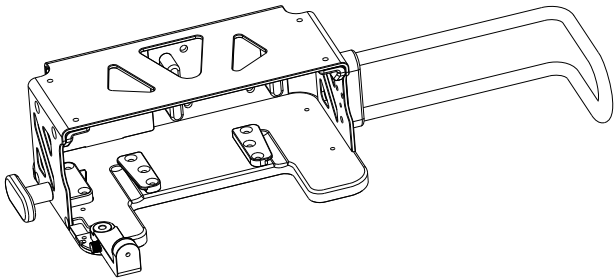

One channel transport bracket

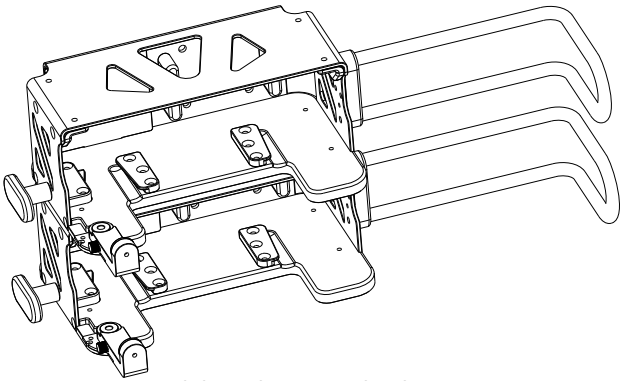

Dual channels transport bracket

WARNING

- **When using in road ambulances or rotary-wing air ambulances, only use dedicated transfer bracket, do not use pole clamp or other installation ways. Otherwise the equipment may fall, causing personal injury.**
- **When securing the pump in the transport bracket, make sure that the pump is properly secured, and the locking mechanism is safely locked in place. Otherwise the equipment may fall, causing personal injury.**
- **Do not lean on the transport bracket after the pump is secured in it. Otherwise the equipment may fall, causing personal injury.**

3.3.4 Installing the Drop Sensor

To install the drop sensor, follow this procedure:

1. Connect the signal line of the drop sensor to the drop sensor connector of the pump.
2. Install the drop sensor to the drip chamber, ensuring that the lower edge of the drop sensor is above the surface of the liquid.

The indicator of drop sensor flashes green when drops are detected during the infusion.

CAUTION

- **To ensure that the pump operates properly, the drop sensor should be properly installed when d/min is switched on.**

- **If the drops in the drip chamber drip continuously, and form an uninterrupted liquid flow. The drop signal cannot be detected, this may cause drop detection abnormal.**
- **After long time infusion, small drops may hang inside the drip chamber. These small drops should be eliminated, otherwise, they may affect the drop detection accuracy and cause the Empty alarm.**

NOTE

- **The liquid surface in the drip chamber should be lower than the lower edge of the drop sensor, and lies between the one third and a half of the drip chamber.**
- **The positioning block of the drip chamber must be vertically inserted through the positioning groove of the drop sensor.**
- **Do not excessively tilt the drop sensor, or expose it to direct sunlight during infusion. Otherwise, accuracy of the drop sensor may be influenced.**

3.4 Setting Up the Equipment

Observance of this manual is a prerequisite for proper product performance and correct operation. It ensures patient and operator safety.

3.4.1 Connecting the AC Mains

The equipment is powered by AC power supply. Before connecting the equipment to the AC mains, check the followings:

- The voltage and frequency ratings of the power line are the same as those indicated beside the AC power input.
- The both sides of the power cord connectors are free of liquid or other residues.
- The inside and surroundings of the AC power input connector are free of liquid or other residues.

To connect the AC power source, follow this procedure:

1. Connect the female end of the power cord to the AC power input.
2. Connect the male end of the power cord to a wall AC outlet.
3. Check that the external power supply indicator is on.

The external power LED lies at the right side of the display. When the AC mains is not connected, the external power LED is off. When AC mains is connected, the external power LED is illuminated in green.

3.4.2 Connecting the DC Power Source

When using the equipment in the ambulance or helicopter, you can use the DC power source to run the equipment. Before connecting the equipment to the DC power source, check the followings:

- The voltage of the power line are the same as those indicated above the multi-functional connector.
- The both sides of the power cord connectors are free of liquid or other residues.
- The inside and surroundings of the multi-functional connector are free of liquid or other residues.

To use the DC power source, follow this procedure:

1. Connect the DC adapter to the multi-functional connector.
2. Connect another end of the DC adapter to the DC outlet.
3. Check that the external power supply indicator is on.

The external power LED lies at the right side of the display. When the DC power source is not connected, the external power LED is off. When the DC power source is connected, the external power LED is illuminated in green.

WARNING

- **Always use the accompanying power cord or DC adapter delivered with the pump.**
- **Before connecting the equipment to the external power source, check that the voltage and frequency ratings of the power line are the same as those indicated on the equipment.**
- **Do not touch the power connector with wet hand. Eliminate the liquid or any residue inside of or at the surroundings of the AC power input connector and multi-functional connector.**
- **Use the battery if the integrity of the protective earth conductor or the protective earthing system in the installation is in doubt.**

CAUTION

- **When connected to the equipment, the power adapter is specified as an integral part of the equipment. Use only the specified adapter.**

3.4.3 Charging the Battery

To optimize performance, a fully or nearly fully discharged battery should be charged as soon as possible. The battery is automatically charged when the pump is connected to

the AC power. The battery can also be charged when the pump is in use with a Dock if the Dock is connected to the AC power.

NOTE

- **The battery can only be charged by the pump or Dock.**
- **The battery is not charged when the pump is running at a rate higher than 1200ml/h.**
- **If the pump is run by battery power, ensure that the battery is adequately charged.**

3.4.4 Adjusting the Screen Brightness

To adjust the screen brightness, follow this procedure:

1. Swipe the touchscreen from top down→ select **Menu** → select **System Options**.
2. Set the **Brightness** and **Brightness On Battery**. The pump automatically adjust the screen brightness according to the set brightness when the pump is switching between the external power and battery power.

3.4.5 Setting the Date and Time

To set the system time, follow this procedure:

1. Swipe the touchscreen from top down → select **Menu** → select **User Maintenance** → input the required password → select ↵.
2. Select **Time and Language**.
3. Select **Date** and **Time**, an set current date and time.
4. Set **Date Format**.
5. If you want to use the 12-hour mode, switch off **24 h**.

NOTE

- **The pump refreshes the displayed date or time format of history record after the date or time format is changed.**

3.4.6 Enabling Password Protection for Unlocking Screen

To avoid unauthorized operations on the pump, you can enable password protection for unlocking screen. Follow this procedure:

1. Swipe the touchscreen from top down → select **Menu** → select **User Maintenance** → input the required password → select ↵.
2. Enable **Password Unlock**.

The password is the **User Maintenance** password by default. To modify the password, select **Modify Password** → **Modify Unlock Password**. For more information, refer to *12.27 Modifying the Password*.

4 Getting Started

4.1 Quick Start Guide

1. Press the power switch to turn on the pump.
2. Load the infusion set. For detailed information, see *4.4 Loading the Infusion Set*.
3. Set the infusion parameters. For detailed information, see *4.5 Starting Infusion*.
4. If required, purge the line. For detailed information, see *4.6 Purge*.
5. Connect the infusion set to the patient access device.
6. Press to start infusion.
7. Press to pause infusion.

4.2 Setting Up the Pump

Before getting started, ensure that the pump is properly set up:

- The pump is placed on a stable surface or secured in the Dock, or properly mounted to an IV pole using the pole clamp.
- The pump is plugged into a properly-grounded AC power outlet. See *3.4.1 Connecting the AC Mains*.
- Press the power switch to turn on the pump. The pump automatically performs a self test at startup. Check that the alarm tone is heard and the alarm lamp illuminates, one after the other, in red and yellow. This indicates that the visible and audible alarm indicators function correctly. The loading guide screen displays. If required, select **Exit** to enter the infusion parameters setting or drug selection screen, set infusion parameters or select drug before loading the infusion sets.
- If the pump is run on battery power, ensure that the battery is adequately charged.

WARNING

- **Before putting the system into operation, the operator must verify that the equipment, connecting cables and accessories are in correct working order and operating condition.**
- **Before putting the system into operation, the operator must ensure that the equipment is properly secured and positioned. When the equipment is used in road ambulances or rotary-wing air ambulances, the operator must check the transport bracket for stability.**

- **Check that visual and auditory alarm signals are presented correctly when the equipment is powered on. Do not use the equipment if you suspect it is not working properly, or if it is mechanically damaged. Contact your service personnel or us.**

NOTE

- **Stay within 1 meter (39 inches) of the pump while setting it up and operating it, making sure that you have a clear view of the pump interface.**
- **The equipment uses a mains plug as isolation means to the mains power. Do not locate the equipment in a place difficult to operate the mains plug.**

4.3 Preparing the IV Container

The height between the IV container and the pump is critical to the flow accuracy. To prepare the IV container, follow this procedure:

1. Hang the IV container.
2. Adjust the pump so that the height between the fluid line and the middle of the pump is no more than 51 cm (20 in.). Distances outside of this tolerance can adversely affect flow accuracy.

4.4 Loading the Infusion Set

1. Close the roller clamp or Robert clamp.
2. Press OPEN to open the pump door.
3. Avoiding any slack, insert the infusion line into the slot, following the flow direction indicator(1). Ensure that the infusion set is straightly and firmly clipped into the tubing channel notches(2) on both sides of the casing.

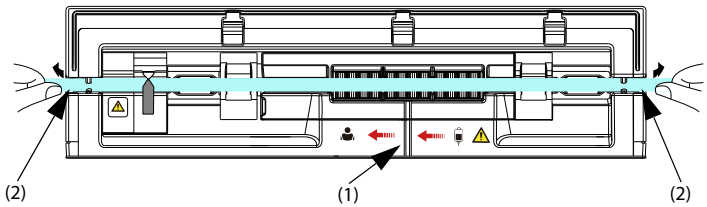

4. Close the pump door.

WARNING

- **To ensure the accuracy of air bubble detection, check and remove the remained fluid in the infusion set slot. Make sure the infusion set slot is dry before loading the infusion set.**
- **While loading the infusion set, do not touch the anti free-flow clamp to avoid being hurt.**
- **The pump should be mounted to the same level as the patient's heart. The most accurate pressure monitoring in the infusion set is achieved when the pump is positioned close to the patient heart level.**
- **This pump uses standard, single use infusion set with Luer lock connections.**
- **Use an infusion set stated in this manual. If a non-recommended infusion set must be used or a different set needs to be changed, contact Mindray Scientific to perform the calibration and performance test before use. Otherwise, the accuracy of the infusion and the performance of the pump may be adversely affected.**
- **To ensure the accuracy of rate and alarm detection, the infusion set should be calibrated in this pump before first use.**
- **When using the pump for blood transfusion, only use disposables dedicated and labelled for transfusion.**
- **Single use accessories are not designed to be reused. Reuse may cause a risk of contamination and affect the measurement accuracy.**
- **Take care that your hands are not squeezed when you close the pump door.**
- **Make sure that the infusion set is located in both sides of the tubing channel notches after loading the infusion set.**

4.5 Starting Infusion

The setup screen displays after the infusion set is loaded properly.

1. Select the drug. If the prescribed drug is not available, exit the drug selection screen, or select **Other Drug**.
2. If required, set the infusion mode. For more information, see chapter *8 Infusion Modes*.
3. Set infusion parameters.
4. Open the roller clamp or Robert clamp.
5. Purge the line. For more information, see *4.6 Purge*.
6. Connect the infusion set to the patient access device.
7. Check the following:

- Verify parameter settings according to the prescriber's order.
- Verify that the displayed infusion set brand and type correspond with the currently used infusion set.

8. Press to start infusion.

WARNING

- **Before starting the infusion, ensure that the selected infusion set brand and type, drug name, and concentration must be the same as the currently used infusion set and drug. Otherwise, the infusion accuracy and alarm function cannot be guaranteed.**
- **Do not connect patient until disposables have been purged and loaded into the pump. Connecting to patient before disposables are loaded and purged can cause serious injury or death.**
- **Check that no drops are falling in the drip chamber before infusion starts or stops. If drips are falling, close the roller clamp or the Robert clamp, do not use the equipment, and contact your service personnel.**

NOTE

- **If the infusion set type is Nutrition or the selected drug type is Enteral Nutrition, "Air detection will be closed" is always displayed in the system information area, "[Enteral feeding] Air detection will be closed" is displayed before starting the infusion or bolus infusion.**
- **The infusion could not be started when the door is open. During an infusion, the door opening key is invalid.**
- **Monitor the connection of infusion set, tubing, pump and patient, and the drug information on a regular basis. Start infusion according to the instructions in this manual.**

4.6 Purge

The infusion set should be purged prior to being connected to a patient. If the infusion set is not purged before being loaded into the pump, proceed as follows to purge the line:

1. Ensure that the pump is disconnected from the patient.
2. Open the roller clamp or Robert clamp.
3. Swipe the touchscreen from top down and select .
4. Select to start purging.
5. If required, set the **Purge Rate**.

6. When purging is complete, select to stop purging.

WARNING

- **The infusion set should be purged before infusion, to avoid air contained in the line getting into the patient.**
- **Disconnect the pump from the patient before purge. Otherwise, the patient will be in danger!**

NOTE

- **If required, set the purge rate after the purge is started. The initial purge rate is 1200 ml/h.**
- **The Air in Line or Accumulated Air alarm will not given during purging.**
- **The volume used for purging is not added to the infused volume.**

4.7 Bolus Infusions

Bolus infusion is a controlled volume of fluid or drug being delivered at an increased rate for diagnostic or therapeutic purposes. The pump should be connected to the patient during bolus infusion.

NOTE

- **The delivered bolus volume will be added to the total infusion volume and subtracted from the volume to be infused (VTBI).**
- **The pump gives a beep every time a 0.5 ml bolus volume is infused.**

4.7.1 Setting the Bolus Rate

To set the bolus rate, follow this procedure:

1. Swipe the touchscreen from top down → select **Menu** → select **General Option**.
2. Set the **BolusRate**.

4.7.2 Automatic Bolus Infusion

To perform an automatic bolus infusion, follow this procedure:

1. Select from the parameter setup screen, infusion running screen or infusion pause screen.
2. Set the **BolusVTBI** in the popup screen. **BolusVTBI**, **BolusRate** and **BolusTime** can be set. When two of these parameters are entered, the third is calculated. Select **Custom** to set the required bolus volume if necessary.

3. Select to start a bolus infusion.

When the configured bolus volume has been infused, the pump exits the bolus screen automatically, and returns to the previous screen. If required, select to stop the bolus infusion.

NOTE

- **If required, adjust the bolus rate in the BolusRate area during an automatic bolus infusion.**

4.7.3 Manual Bolus Infusion

To perform a manual bolus infusion, follow this procedure:

1. Select from the parameter setup screen, infusion running screen or infusion pause screen.
2. Set the **BolusRate** in the popup screen.
3. Press and hold to deliver the required bolus.
4. Release to stop the bolus infusion.

When the configured bolus volume limit is reached, the pump stops the bolus infusion automatically, exits the bolus screen automatically, and returns to the previous screen.

NOTE

- **The manual bolus volume limit is set in the User Maintenance menu. See *12.14 The Bolus Limit Settings*.**

4.7.4 Setting the Bolus Volume Unit

To set the bolus volume unit, follow this procedure:

1. Swipe the touchscreen from top down → select **Menu** → select **User Maintenance** → input the required password → select .
2. Select the **Bolus Volume Unit**:
   - **ml**: the **BolusVTBI** unit is **ml** in each infusion mode. In the **Dose Mode** or **Dose Time Mode**, the default unit of **BolusVTBI** is ml.
   - **Dose**: in the **Dose Mode** or **Dose Time Mode**, and the parameters are set, the default unit of **BolusVTBI** is X or ml, in which X represents ng, µg or mcg, mg, g, mU, U, kU, EU, mmol, mol, mcal, cal, kcal, and mEq.

The **BolusVTBI** units in the **Dose Mode** or **Dose Time Mode** are as follows:

- After **Weight** and **Conc.** are entered, the supported **BolusVTBI** units are ml, X, X/kg, and ml/kg, in which X represents ng, µg or mcg, mg, g, mU, U, kU, EU, mmol, mol, mcal, cal, kcal, and mEq.

- After **Body Surface Area** and **Conc.** are entered, the supported **BolusVTBI** units are ml, X, and X/m^2, in which X represents ng, µg or mcg, mg, g, mU, U, kU, EU, mmol, mol, and mEq.
- After **Conc.** is entered, the supported **BolusVTBI** units are ml and X, in which X represents ng, µg or mcg, mg, g, mU, U, kU, EU, mmol, mol, mcal, cal, kcal, and mEq.
- After **Weight** is entered, the supported **BolusVTBI** units are ml and ml/kg.

4.8 Changing the Infusion Parameters

You can modify rate, time, VTBI, or dose rate without stopping the infusion. This function is called titration. If you modify an infusion parameter, the pump will recalculate other infusion parameters. The logic of basic infusion parameters is as follows:

Modified parameters	Recalculated parameters
Rate	Time
Time	Rate
VTBI	Time

To change rate, time, VTBI, or dose rate, follow this procedure:

1. Select the above parameters in the infusion running screen.
2. Reconfigure the parameters in the popup dialogs and select **Confirm**.
3. Select **Accept** to commit and apply the changes.

To change other infusion parameters, follow this procedure:

1. Press to pause the infusion.
2. Select the desired parameter area, and reconfigure parameters as per the prescriber's order.
3. Select **OK** to confirm the changing.
4. Press again to resume the infusion.

4.9 Pausing the Infusion

Press to temporarily stop a running infusion.

Press again to restart the infusion after the infusion solution change.

4.10 Setting Keep Vein Open (KVO) Rate

At the end of infusion, the pump continues to infuse at a very low rate. KVO is used to keep the patient's vein open, to prevent back flow or vascular occlusion.

The default KVO rate is 0.5 ml/h. To edit the KVO rate, follow this procedure:

1. Swipe the touchscreen from top down→ select **Menu** → select **General Option**.
2. Set the **KVO Rate**. If **KVO Rate** is zero, the pump will not initiate a KVO infusion when the preset volume is complete.

NOTE

- **If the KVO rate is greater than the infusion rate, the pump will continue to infuse at the set infusion rate.**
- **The pump runs for 30 minutes at a KVO rate. At the completion of the KVO infusion, the pump stops infusion, and gives a KVO Finish alarm.**
- **The volume used during KVO infusion will be added to the total infusion volume.**

4.11 Replacing the IV Container

To replace the IV container, follow this procedure:

1. Press to pause the infusion.
2. Close the roller clamp or Robert clamp to avoid free flow.
3. Remove the IV container from the IV pole, and replace a new container.

NOTE

- **Check the infusion status after replacing the IV container. If the pump is running a KVO infusion, reconfigure the infusion parameters before restarting the infusion.**

4.12 Unloading the Infusion Set

1. In the main screen, select to stop the infusion.
2. Close the roller clamp or Robert clamp.
3. Disconnect the patient from the infusion set.
4. Press OPEN to open the pump door.
5. On the outside of the pump, grasp the tubing on both sides of the pump and pull the tubing straight out of the pumping channel.
6. Proceed the next operation as needed:
   - Continue the therapy: see *4.4 Loading the Infusion Set* and *4.5 Starting Infusion*.
   - Enter the Standby mode: see *4.15 Entering the Standby Mode*.
   - Turn off the pump: see *4.16 Turning Off the Pump*.

WARNING

- **The infusion sets shall be changed every 24 hours (or as per national health hygiene regulations or manufacturer's instructions), and change the pumping segment every 4 hours, ensure that the new pumping segment is at least 10 cm away from the previous position to maintain accurate infusion delivery.**
- **The enteral nutrition infusion sets shall be changed every 24 hours, and change the pumping segment every 4 hours, ensure that the new pumping segment is at least 10 cm away from the previous position to maintain accurate infusion delivery.**
- **When the pump is in the standby mode, the pumping segment shall be changed every 4 hours to maintain accurate infusion delivery.**
- **To prevent free flow, ensure that the roller clamp or Robert clamp is closed before removing the infusion set from the pump.**

4.13 Managing Secondary Infusion

You can manage your infusion with the Secondary Infusion function in the following situations:

- When you need to infuse two drugs consecutively using one pump.
- When you need to pause an ongoing infusion and add a secondary infusion without disconnecting the current infusion line.

To manage the secondary infusion, follow this procedure:

1. Prepare the primary and secondary IV containers. For details, see *4.13.1 Preparing the Primary and Secondary IV Containers*.
2. Set the parameters for primary and secondary infusions. For details, see *4.13.2 Setting the Parameters for Primary and Secondary Infusions*.
3. Start secondary infusion. For details, see *4.13.3 Starting Secondary Infusion*.
4. Stop the infusion. For details, see *4.13.4 Stopping Secondary and Primary Infusions*.

4.13.1 Preparing the Primary and Secondary IV Containers

To prepare the IV container, follow this procedure:

1. Prepare the primary IV container as described in *4.3 Preparing the IV Container*.
2. Select an infusion set with Y-connector and check valve for primary infusion. Then load the infusion set as described in *4.4 Loading the Infusion Set*.
3. Hang the secondary IV container. Make sure the top of the secondary IV container is about 20 cm higher than the top of the primary IV container.

4. If needed, purge the secondary infusion line. For more information, see *4.6 Purge*.
5. Close the roller clamp or Robert clamp of the secondary infusion set. Connect the secondary infusion set to the primary infusion set through the Y connector.

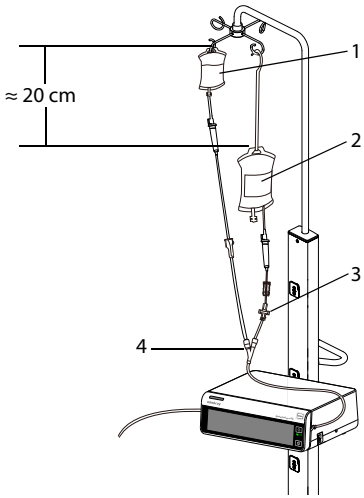

1	Secondary IV container	2	Primary IV container
3	Check valve	4	Y container

4.13.2 Setting the Parameters for Primary and Secondary Infusions

To set the parameters, follow this procedure:

1. Press to stop the infusion if necessary.
2. Swipe the touchscreen from top down→ select **Secondary**. The Secondary Infusion screen is displayed. The primary infusion area is on the left and the secondary infusion area is on the right.
3. From the primary infusion area, select the drug and brand name. Then set the infusion rate.
4. From the secondary infusion area, select the drug. Then set any two of the parameters rate, time, and VTBI.

NOTE

- **If the secondary infusion rate exceeds 500 ml/h, concurrent flow may be caused in the primary infusion line. In this case, close the clamp of the primary infusion set.**

4.13.3 Starting Secondary Infusion

To start the secondary infusion, follow this procedure:

1. Open the roller clamp or Robert clamp of the secondary infusion set.
2. If needed, purge the line. For more information, see *4.6 Purge*.
3. If needed, connect the primary infusion set to the patient access device.
4. Check the following:
   - Verify parameter settings according to the prescriber's order.
   - Verify that the displayed infusion set brand and type correspond with the currently used infusion set.
5. Press to start infusion. The pump starts secondary infusion.
   - If **Secondary Callback** is **On**, when the secondary infusion is finished, you need to start primary infusion manually.
   - If **Secondary Callback** is **Off**, when the secondary infusion is finished, the pump starts primary infusion automatically. For details, see *7.2 General Option*.

WARNING

- **Do not connect patient until disposables have been purged and loaded into the pump. Connecting to patient before disposables are loaded and purged can cause serious injury or death.**
- **Check that no drops are falling in the drip chamber before infusion starts or stops. If drips are falling, close the roller clamp or the Robert clamp, do not use the equipment, and contact your service personnel.**

4.13.4 Stopping Secondary and Primary Infusions

When the secondary and primary infusions are finished, proceed as follows to stop the infusion:

1. Make sure the infusions are finished. Press to stop the infusion if necessary.
2. Swipe the touchscreen from top down→ select **Secondary**→ select **Confirm**.
3. Unload the infusion set. For details, see *4.12 Unloading the Infusion Set*.

4.13.5 Switching to Primary or Secondary Infusion

If you need to switch to the other infusion during secondary or primary infusion, follow this procedure:

1. Select to stop the current infusion.

2. Select to switch from the secondary infusion screen to the primary infusion screen or reversely.

3. If needed, change the infusion parameters.

   - If drug is changed, the parameter settings and infused volume of this drug are cleared.
   - If drug is unchanged, after starting the infusion, the infused volume continues to add up.

4. Make sure the correct screen is displayed, and then select to start infusion.

4.14 Viewing the Infused Volume

The **Volume** dialog allows you to review the infused volume of up to 24 hours. You can also view the infused volume of the configured time interval and time length.

Choose either of the following ways to enter the **Volume** dialog:

- Swipe the touchscreen from top down → select **Volume**.
- Select **Volume** from the **Pause** screen.

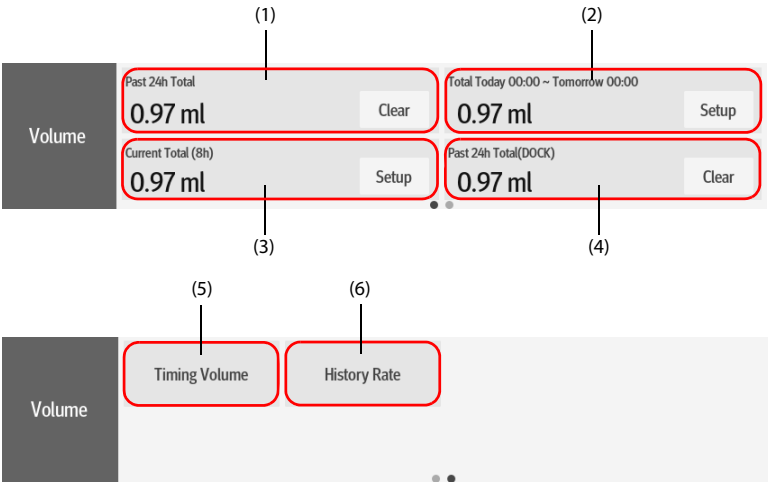

(1) **Past 24h Total**: view the total infused volume in the past 24 hours. The display range is 0 ml to 99999.99 ml.
Select **Clear** to clear the infused volume.

(2) View the total infused volume in the configured time period.
Configure the time period before viewing the total infused volume in the configured time period.

(3) View the recent total infused volume.
Configure the time before viewing the total infused volume within the configured time.

(4) **Past 24h Total(DOCK)**: view the total infused volume of the pumps secured in the Dock in the past 24 hours.
Select **Clear** to clear the infused volume.
Note: It displays only when pumps are connected to the Dock.

(5) **Timing Volume**: view the total infused volume of the configured timing interval. Configure the **Timing Interval** before viewing the total infused volume of each interval.

(6) **History Rate**: view the history rate.

NOTE

- **The infusion volume cannot be cleared when an infusion is running.**

4.15 Entering the Standby Mode

If the pump is not in use, you can swipe the touchscreen from top down, and select to set the pump to standby mode. In standby mode, if a drug has been selected, the drug name (and concentration if a fixed concentration is configured) is displayed on the screen.

While the pump is in the standby mode, select to set the standby time. The maximum standby time is 24 hours. When the configured standby time is expired, the pump exits the standby mode automatically.

To manually exit the standby mode, select .

4.16 Turning Off the Pump

Before turning off the pump, perform the following check:

1. The infusion is completed.
2. The patient is disconnected from the pump.
3. The infusion set is removed from the pump.

To turn off the pump, press and hold the power switch and select **Turn Off**. If the infusion set is not removed from the pump, the pump gives prompt message **Remove infusion set to turn off**. Select **OK**, and unload the infusion set.

CAUTION

- **Press and hold the power switch for no less than 10 seconds to forcibly shut down the pump if it could not be shut down normally. This may cause loss of patient data.**

NOTE

- **Turning off the pump does not disconnect the pump from the AC mains. To completely disconnect the power supply, unplug the power cord.**
- **The pump loads the recent configuration upon restart by default. If necessary, contact the service personnel to set the pump to load the desired default configuration.**
- **If the pump is set to load the default configuration upon restart, follow the prompts during startup or shutdown to check the loading status of the default configuration.**

5 Using the Dock

This equipment can only be mounted to the BeneFusion n series and e series Infusion Supervision System, hereafter referred to as “Dock”. For how to use the Dock, see *the Operator's Manual of the corresponding Dock.*

5.1 Securing the Pump in the Dock

To secure the pump in the Dock, firmly push the pump until you hear that the clip engages the pump bay.

To unlock and remove the pump, hold the pump, then turn the unlocking knob clockwise to the vertical position and slide the pump out of the bay.

CAUTION

- **The alarm sound from the pump is disabled when the pump is secured in the BeneFusion nDS Infusion Supervision System (Dock). The alarm sound is given by the Dock.**
- **The alarm sound from the pump is enabled when the pump is secured in the BeneFusion eDS Infusion Supervision System (Dock). The alarm sound is given by the respective pump.**

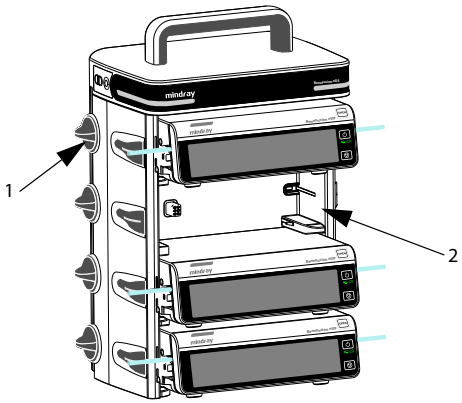

(1) Unlocking knob (2) Pump bay

5.2 Relay Infusion

Multiple pumps can be combined to infuse at a preset sequence when used with the Dock. Pumps in a single Dock or pumps in the secondary Docks are all available for relay infusion. Up to 24 pumps can be combined for a relay infusion.

NOTE

- **Relay infusion is available for Rate Mode, Micro-infusion Mode, Time Mode, Dose Mode, Drip Mode and Dose Time Mode.**
- **When a relay infusion is set up, the sequence of the current pump in the relay is displayed in the system information area. For example, symbol indicates that the current pump is the second in a circular relay.**
- **You cannot change the sequence of the pumps when the relay infusion is set up.**
- **When the relay infusion is set up for pumps with different software versions, the pump may prompt that the versions are incompatible and the relay infusion is not supported.**

5.2.1 Setting up a Relay Infusion

To set up a relay infusion, follow this procedure:

1. Connect the pump to the Dock.
2. Swipe the touchscreen from top down, and select **Relay**.
3. Select one of the following options:
   - **Customized Relay**: The relay infusion runs in a preset order, and completes when the last relay pump finishes the infusion.
   - **Circular Relay**: The relay infusion runs in a preset order, and the first pump continues to infuse when the last relay pump completes the infusion.
4. From the desired pumps, select **Yes** in the dialog.
5. Select the sequence of the relay pumps.
6. Select **Confirm** from the initial pump to complete the setting.
7. Select whether to synchronize the parameter settings:
   - **No**: Set the parameters of the pumps respectively, the settings of the current pump are not synchronized to other relay pumps.
   - **Yes**: Only set the parameters of the current pump, the settings of the current pump are synchronized to other relay pumps.
8. Select from the first pump to start the relay infusion.

NOTE

- **The parameter settings of the initial pump can be synchronized only when the drug library and concentration settings of all relay pumps are the same.**
- **Only the parameter settings of the initial pump can be synchronized. The parameter VTBI cannot be synchronized.**

5.2.2 Smooth Relay Infusion

Smooth relay is used to continuously infuse the same drugs (such as vasopressors and antiarrhythmic drugs) at the same rate between two pumps.

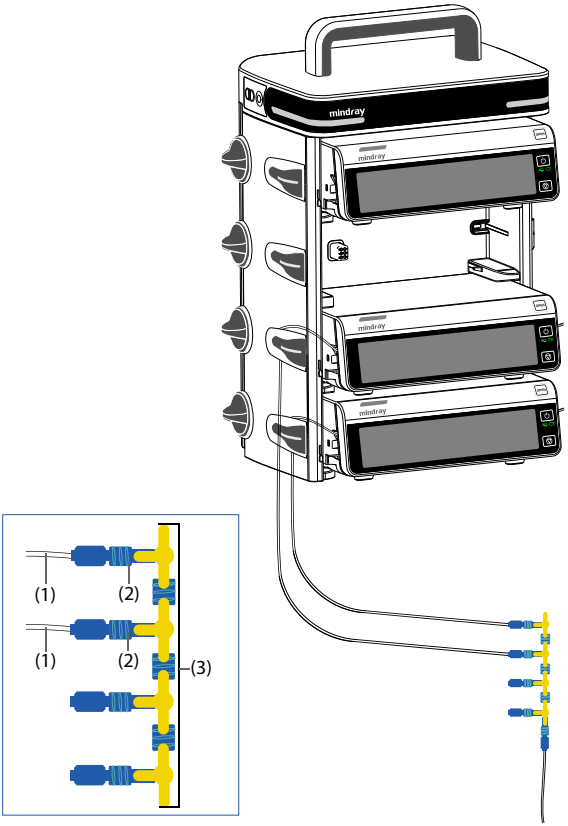

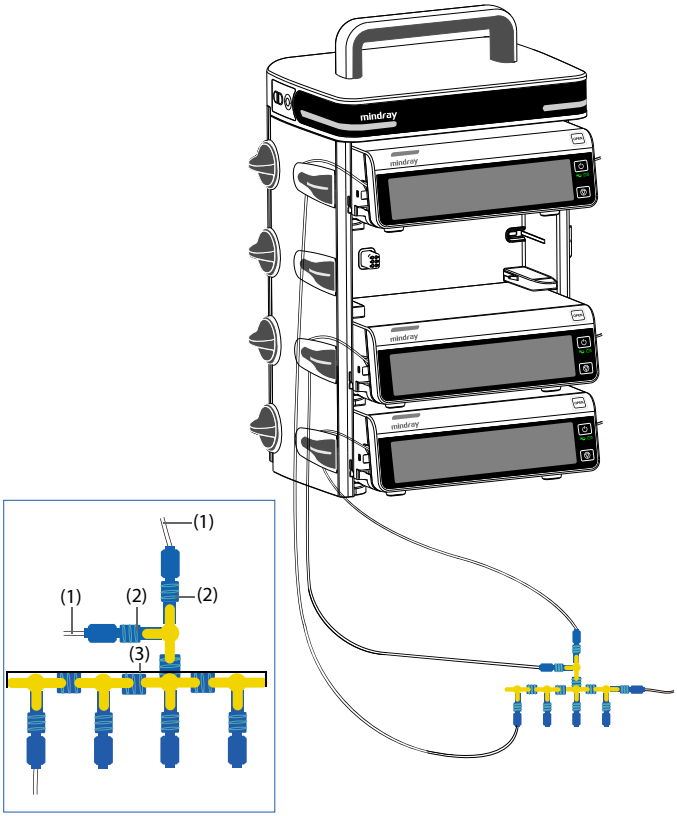

(1) Infusion set (2) Connector (3) Primary infusion set

To ensure stability of dose rate of the drug, before starting a smooth relay infusion, check the followings:

- Use the recommended infusion sets stated in this manual, and ensure the displayed infusion set brand and type correspond with the currently used infusion set.
- Keep the infusion sets of the upstream pumps and the infusion sets of the downstream pumps as close to the connectors of the primary infusion sets as possible or use a specialized three-ways stopcock. Use three-ways/multiple-ways stopcock and infusion sets without check valves and filter membranes.
- The infusion set and connector of downstream pumps are filled with liquid to be infused, and there is no air bubble after connection.

NOTE

- **As for patients with unstable physiological parameters, always keep the patient's clinical condition under close surveillance during a smooth relay infusion.**

5.2.3 Canceling the Relay

To cancel a relay infusion, swipe the touchscreen from top down → select **Relay** → select **Cancel Relay**.

- For the circular relay, canceling at the current pump removes all pumps from the relay infusion.
- For the customized relay, canceling at the current pump removes all pumps from the relay infusion.

CAUTION

- **Removing a relay pump from the Dock cancels the relay infusion.**
- **For a circular relay, initiating a middle pump cancels the relay. For a customized relay, initiating a middle pump removes the pumps before it from the relay.**
- **During the smooth relay infusion, operations on the current pump including modifying flow rate, administering a bolus and manually stopping infusion cause the relay infusion to be canceled.**

5.3 Performing Prescription

When the system is in proper network connection, to perform the prescription, follow this procedure:

1. Connect the pump to the Dock.
2. Scan the QR code from the screen to accept prescription. To enter the QR code screen, select one of the following options:
   - Enter the loading guide screen.
   - Swipe the touchscreen from top down→ select **Link Code**.
   - Swipe the touchscreen from left to right on the infusion screen or drug selection screen.
3. When the **Prescription Received** switch is turned on, select **Accept** to load the prescription parameters on the prescription details screen.
4. Set infusion parameters on the main screen.
5. Select to start the infusion.

6. To end the prescription, select one of the following options:
   - The prescription is automatically ended after the infusion is completed.
   - Swipe the touchscreen from top down→ select **End Prescription** → select **Confirm**.

NOTE

- **The Prescription Received is set in the User Maintenance menu. See *12.16 The Prescription Setup*.**
- **The supported infusion modes are Rate Mode, Dose Mode and Loading Dose Mode after the prescription is accepted.**
- **Prescription status is always displayed in the system information area. For example, the message "Prescription infusing" is displayed in the area during a prescription infusion.**

5.4 Configuring Pumps in Batches through the Dock

When pumps are connected to the Dock, you can configure all the pumps in batches through the Dock. For details, see *BeneFusion nDS and BeneFusion eDS Infusion Supervision System Operator's Manuals*.

5.5 Setting Remote Control

When pumps are connected to the Dock, you can set remote control for pumps through the **Dock Setup** menu. Follow the procedure below:

1. Swipe the pump touchscreen from top down → select **Menu** → select **Dock Setup** → input the required password → select ↵.
2. Select **RemoteControl Setting**. For details about menu items, see *12.3 The Patient Information Settings*.

6 Alarms

6.1 Alarm Safety Information

WARNING

- **A potential hazard can exist if different alarm presets and default settings are used for the same or similar equipment in the same care area, for example an intensive care unit or cardiac operating room.**
- **The equipment in your care area may each have different alarm settings to suit different patients. Always check that the alarm settings are appropriate for your patient before start infusing.**
- **When the alarm sound is paused, the equipment gives no alarm tones even if a new alarm occurs. Be careful about whether to pause the alarm sound or not. When the alarm sound is paused, observe the patient frequently.**
- **When the alarm sound is switched off, the equipment gives no alarm tones even if a new Reminder, Low Battery, KVO Running, Battery in Use, Battery Error, Standby Time Expired, Relay invalid soon, Smooth Relay in Progress, Para. Unconfirmed or System Time Error alarm occurs. Be careful about whether to switch off the alarm sound or not. When the alarms are off, observe the patient frequently.**
- **Do not rely exclusively on the audible alarm system during an infusion. Adjustment of alarm volume to a low level or turning off alarm sound may result in a hazard to the patient. Always make sure that the audio alarm volume level is adequate in your care environment. Always keep the patient under close surveillance.**
- **Fully evaluate the risk before changing the alarm mode setting. New alarms may be failed to be detected if the operator is not familiar with the new sound.**

6.2 Understanding the Alarms

6.2.1 Alarm Priorities

By severity, the alarms are classified into the high priority alarms and low priority alarms.

6.2.2 Alarm Indicators

When an alarm occurs, the equipment indicates it visually and audibly. For more information, see the following table.

Alarm priority	Alarm lamp color	Alarm lamp flashing frequency	Alarm sound interval	Alarm message	Alarm priority indicator	Duty Cycle
High priority alarm	Red	2.0 ± 0.6 Hz	5s (±2s)	White text or symbol inside a red box	!!!	20% to 60%
low priority alarm	Yellow	Not flashing	20s (±2s)	Black text or symbol inside a yellow box	!	100%

NOTE

- **The tones of the alarm sound and the reminder sound are different.**
- **The frequency of the reminder sound and the bolus sound is 600Hz, which is different from the frequency of alarm sound.**
- **When multiple alarms occur simultaneously, the alarm messages are displayed circularly, and the sound and light of the higher priority alarm are given.**

6.2.3 Alarm Screen

When an alarm occurs, the alarm screen is displayed to help you identify the problem.

NOTE

- **The alarm screen always displays the alarm of the highest priority.**

6.3 Resetting Alarms

When an alarm occurs, press to acknowledge and reset the alarm. The alarm reset state has the following features:

- A appears before the alarm message, indicating that the alarm is acknowledged.
- The alarm sound is silenced, and the alarm screen disappears.
- The alarm reset symbol is displayed after the alarm message.

For the following alarms, when they are reset, all the alarm indications (alarm sound, alarm message, and alarm light) disappear.

- **VTBI Complete**
- **KVO Finish**
- **Standby Time Expired**
- **Empty**

6.4 Pausing Alarm Sound

To enter the audio pause state, choose one of the following ways:

- Select in the alarm screen.
- Swipe the touchscreen from top down, and select .

The audio pause state has the following features:

- Except for the **Battery Depleted** alarm, the sound of all alarms are silenced for two minutes.
- The audio pause symbol is displayed in the system information area.
- If a new alarm is triggered during the audio pause state, the sound of the new alarm will also be silenced.

When the audio pause time expires, the audio paused state is automatically deactivated.

You can also cancel the audio paused state by pressing again.

For the **Low Battery**, **Reminder**, and **Time Near End** alarms, press and the pump gives a reminder sound every 5 minutes. The symbol is displayed after the alarm message.

NOTE

- **Except for the Battery Depleted alarm, the sounds of all alarms are paused by pressing .**

6.5 Setting the Alarm Sound

6.5.1 Setting the Alarm Volume

To change the alarm volume, follow this procedure:

1. Swipe the touchscreen from top down → select **Menu** → select **System Options**.
2. Set the **Sound Volume**. The sound volume can be set from X to 8, in which X is the minimum volume, depending on the setting of minimum alarm volume, and 8 is the maximum volume.

To set the alarm volume to 0, follow this procedure:

1. Connect the equipment to the BeneVision Central Monitoring System, see *11.2 Connecting the Equipment to the nCS / CMS*.
2. Set the **Minimum Alarm Volume** to 0, see *12.12 The Alarm Settings*.
3. Set the **Sound Volume** to 0, the pump gives prompt message **Please make sure that the alarm can sound in the distributed alarm device.** Select **Yes**, the symbol is displayed in the alarm information area.

After the pump is secured in the pump bay of the Dock, to set the alarm volume to 0, follow this procedure:

1. Connect the equipment to the BeneVision Central Monitoring System, see *11.2 Connecting the Equipment to the nCS / CMS*.
2. Set the **Minimum Alarm Volume** to 0, see *12.12 The Alarm Settings*.
3. Set the **Sound Volume** to 0, the pump gives prompt message **Please make sure that the alarm can sound in the distributed alarm device.** Select **Yes**.
4. The pump gives prompt message **Set Sound Volume to 0 and synchronize to other pumps.** Select **Yes**, **Sound Volume** of other pumps is set to 0, the symbol is displayed in the alarm information area.

- After another pump is secured in the pump bay of the Dock:
  - If **Sound Volume** is set to 0, the symbol is displayed in the alarm information area.
  - If **Sound Volume** is not set to 0, set the **Minimum Alarm Volume** to 0 as prompted, the symbol is displayed in the alarm information area.
- After the pump is removed from the Dock, the **Sound Volume** restores to default configuration.
- After the **Sound Volume** of a pump is changed, the **Sound Volume** after change will synchronize to other pumps.

NOTE

- **When Sound Volume is set to 0, for the Reminder, Low Battery, KVO Running, Battery in Use, Battery Error, Standby Time Expired, Relay invalid soon,**

Smooth Relay in Progress, Para. Unconfirmed or System Time Error alarms, the alarm sound is turned off, and the alarm sound is given by the BeneVision Central Monitoring System.

6.5.2 Setting the Alarm Sound Mode

To change the alarm sound mode, follow this procedure:

1. Swipe the touchscreen from top down → select **Menu** → select **User Maintenance** → input the required password → select ↵.
2. Select the **Alarm**.
3. Set the **Alarm Sound**.

6.6 Nurse Call

The equipment provides a multi-function connector to output nurse call signal when a user-defined alarm occurs. To obtain nurse call signal, use the nurse call cable to connect the hospital's nurse call system with the equipment's multi-function connector.

Alarms are indicated on the nurse call device only when the following conditions are met:

- The nurse call system is enabled.
- A user-defined alarm occurs.

NOTE

- **Do not rely exclusively on the nurse call system for alarm notification. Remember that the most reliable alarm notification combines audible and visual alarm indications with the patient's clinical condition.**

To set the alarms that are sent to the nurse call system, follow this procedure:

1. Swipe the touchscreen from top down → select **Menu** → select **System Options** → select **Nurse Call**.
2. Set the nurse call switch.
3. Select **Signal Type** to set the type of alarms that are sent to the nurse call system.
   - **Pulse**: the nurse call signal is a pulse signal and each pulse lasts one second. When multiple alarms simultaneously occur, only one pulse signal is outputted. If an alarm occurs but the previous one is not cleared, a new pulse signal will also be outputted.
   - **Continuous**: the nurse call signal lasts until the alarm ends. That is to say the duration of a nurse call signal is equal to that of the alarm condition.
4. Select **Trigger Type** to set the work mode of the nurse call relay.
5. Select **Alarm Level** to set the priority of alarms sent to the nurse call system.

6.7 Alarm Solutions

WARNING

- **When an alarm occurs, check the pump's status and handle the alarm as soon as possible. If the alarms do not conform with the actual situation, contact your service personnel.**

Alarm	Priority	Causes	Solutions
Air in Line	High	Single air bubble in the infusion set exceeds the preset **Bubble Size** limit.	• Disconnect the patient from the pump, and purge the line. • Check the single bubble limit is properly setup. Increase the limit if necessary. • Remove the air bubbles according to the department protocols or hospital protocols if required.
Accumulated Air	High	The accumulated air bubbles in the infusion set exceeds the preset **Accumulated Air** limit.	• Disconnect the patient from the pump, and purge the line. • Check the accumulate bubble limit is properly setup. Increase the limit if necessary. • Remove the accumulated air bubbles according to the department protocols or hospital protocols if required.
Empty	High	**Empty Sensitivity** is not **Off**, the drop sensor is installed and **Drop Sensor** is **On**, or the drop sensor is not installed and **Drop Sensor** is **Off**, and the fluid container is empty.	• Press to reset the alarm. • Continue therapy or select new therapy.

Alarm	Priority	Causes	Solutions
Drop Error	High	The fluid is dripping too slow or too fast.	• Check that the drop sensor is connected to the pump properly. • Replace the drop sensor. • If the alarm persists, contact your service personnel.
Upstream Occlusion	High	An occlusion occurred at the supply end (the tubing between the container and the pump).	• Check if kinks are in tubing and tubing isn't damaged. • Check the infusion set patency.
Downstream Occlusion	High	An occlusion occurred at the patient end (the tubing between the patient and the pump). The preset pressure limit is exceeded.	• Check if kinks are in tubing and tubing isn't damaged. • Check the infusion set patency. • Check the pressure limit is properly setup. Increase the limit if necessary.
Infusion Set Disengaged	High	The infusion set is disengaged from the pump during the infusion or when the infusion is paused.	Close the roller clamp or the Robert clamp to stop the infusion, check whether the infusion set is loaded properly, and reload the infusion set.
No Infusion Tube	High	The infusion set is not loaded properly.	Close the roller clamp or the Robert clamp to stop the infusion, and reload the infusion set.
Infusion Set Error	High	Abnormal pressure is detected after loading the infusion set.	Check whether the infusion set is damaged, replace or reload the infusion set.
No Drop Sensor	High	No drop sensor or drop sensor fault.	Install a drop sensor or replace the drop sensor.
Secondary VTBI Completed	High	The infused volume reaches the preset **Secondary VTBI**.	• Press to reset the alarm. • Check the primary parameters.
Battery Depleted	High	The battery is depleted.	Connect the pump to the external power source.

Alarm	Priority	Causes	Solutions
VTBI Complete	High	The preset VTBI is completed.	• Press to reset the alarm. • Continue therapy or select new therapy.
KVO Finish	High	The KVO infusion is running for thirty minutes.	• Press to reset the alarm. • Continue therapy or select new therapy.
Relay Invalid	High	• The pump is disconnected from the Dock. • In the relay state, the upstream pumps have completed the infusions yet the downstream pumps are not ready for infusion.	• Check the connection between the pump and the Dock. • Check that the downstream pumps are properly configured for infusion.
System Error	High	The pump system faults, such as storage error, hardware fault, etc.	Stop using the pump, and contact your service personnel.
Start Frequently	High	Start infusion 5 times within 10 seconds.	Press to clear the alarm.
Smooth Relay in Progress	Low	The smooth relay infusion is running.	Press to acknowledge the alarm.
Anesthesia System Disconnected	Low	The pump is disconnected from the anesthesia system, and the wireless network disconnection symbol is displayed.	Reconnect the pump with the anesthesia system, and the wireless network connection symbol is displayed.
KVO Running	Low	The infusion is completed and the pump continues infusion at the KVO rate.	• The alarm is cleared after the KVO infusion reaches 30 minutes. • Press to pause the KVO infusion. • Complete the infusion or prepare for a new therapy.

Alarm	Priority	Causes	Solutions
Battery in Use	Low	The external power source has been disconnected and the pump runs on battery power.	• Press to reset the alarm. • Connect the pump to the external power source.
Battery Error	Low	Battery fault, such as battery over heat, charging failure, etc.	Contact your service personnel.
CMS/eGW Disconnected	Low	The pump is disconnected from the CMS, and the wireless network disconnection symbol is displayed.	• Reconnect the pump with the central station, and the wireless network connection symbol is displayed. • If the alarm persists, contact your service personnel.
Standby Time Expired	Low	The preset standby time is reached.	Press to reset the alarm.
Dock Connection Interrupt	Low	The pump is disconnected from the Dock.	• Reinsert the pump to the Dock. • Insert the pump to another pump bay. • If the alarm persists, contact your service personnel.
System Time Error	Low	The real time clock (RTC) reset or RTC fault.	• Re-set the system time. See *3.4.5 Setting the Date and Time*. • If the alarm persists, contact your service personnel.
Relay Invalid Soon	Low	In the relay state, the upstream pumps have almost completed the infusions yet the downstream pumps are not ready for infusion.	Check that the downstream pumps are properly configured for infusion.
Time Near End	Low	The remaining infusion time reaches the configured time near end.	Complete the infusion or prepare for a new therapy.

Alarm	Priority	Causes	Solutions
Reminder	Low	No operation is detected after the preset **Reminder Time** is reached.	Turn off the pump or enter the standby.
Low Battery	Low	Low battery.	Connect the pump to the external power source.
Para. Unconfirmed	Low	No operation is detected for 10 seconds in the parameter edit state.	• Press to exit the parameter edit state. • Edit and confirm the parameter setting.
Storage error, please restart	Low	History record stored on the pump is abnormal.	Restart the pump.

NOTE

- **The pump stops infusion when a high priority alarm is triggered.**
- **The pump continues infusion when a low priority alarm is triggered.**
- **The pump stops infusion after the first Battery Depleted alarm occurs, and the shutdown delay is at least three minutes.**
- **Continue to work for at least thirty minutes after the first Low Battery alarm occurs in the specified conditions (operating with a fully charged new battery at 20°C ± 2°C, screen brightness configured to 2, default volume, Wi-Fi disabled, drop sensor disconnected).**
- **The pump stops the infusion and gives an Occlusion alarm when occlusion occurs. After an occlusion alarm, motor is reversed and pressure in the line is released to prevent additional dose to the patient after occlusion is cleared.**

6.8 Occlusion Alarm

Signals collected by the built-in pressure sensor is used for pressure calculation by the internal Central Processing Unit (CPU). The calculated pressure value is compared with the set occlusion alarm limit, the pump gives prompt message **Pressure increasing.Occlusion?** when the downstream pressure continuously increases and exceeds the set limit. The pump stops the infusion and gives an **Occlusion** alarm when the pressure exceeds the set limit.

Occlusion pressure should be configured according to patient needs. To set the occlusion pressure, follow this procedure:

1. Swipe the touchscreen from top down → select **Menu** → select **General Option** → select **OcclusionPressure**.

2. Select the desired pressure.

The pump restarts the infusion when the pressure that caused the alarm is reduced. When the number of auto restarts has been reached, the infusion will not restart after an occlusion alarm. A bolus reduction is automatically initiated by the pump after the restart is failed or the occlusion alarm is reset.

The auto restart function can be configured in the **User Maintenance** menu. See *12.20 The Auto-Restart Setting*.

WARNING

- **When the pump infuses at a low rate, pay close attention to the infusion lines, and verify whether the line is kinked. The lower the rate, the longer of the occlusion alarm response time. This may cause infusion is paused for a prolonged time, resulting in drug underdose.**

CAUTION

- **After an occlusion alarm, close the roller clamp immediately, or disconnect the line between the extension set and patient, to prevent liquid in the line being absorbed after the restart is failed.**

NOTE

- **If this pump is running at 0.1ml/h, and respectively configure the occlusion pressure alarm limit to the lowest level and highest level, the occlusion alarm delay time may reach up to one hour and 20.5 hours. Adjust the pressure limit to a lower level, or use the syringe pump for a low rate infusion.**

This page intentionally left blank.

7 Menu Options

7.1 Main Menu Options

The main menu includes the following options:

Menu Item	Details
General Option	See *7.2 General Option*.
Department Management	See *7.3 Department Management*.
System Options	See *7.4 System Options*.
View Prescription	Views the prescription details.
Patient Management	See *10 Managing Patient*.
Discharge Patient	See *10 Managing Patient*.
User Maintenance	See *12 Password Protected Settings*.
Dock Setup	See *BeneFusion nDS and BeneFusion eDS Infusion Supervision System Operator's Manuals*.

7.2 General Option

The **General Option** menu comprises a list of options for configuring the infusion. To access the **General Option** menu, follow this procedure:

1. Swipe the touchscreen from top down→ select **Menu** → select **General Option**.
2. Select the desired option.

Menu Item	Default	Range	Function
Current	/	/	Displays the current line pressure.

Menu Item	Default	Range	Function
OcclusionPressure	450mmHg	See *A.7 Infusion Specifications*.	Set the downstream occlusion alarm limit. The pump gives the **Downstream Occlusion** alarm when the downstream occlusion pressure exceeds the alarm limit.
Bubble Size	100ul	15, 50, 100, 250, 500, 800 µl	Set the alarm limit for the size of single air bubble. The pump gives the **Air in Line** alarm when the size of single air bubble exceeds the alarm limit.
Accumulated Air*	0.4ml/ 15min	0.1ml/15min to 1.0ml/15min	Set the alarm limit for the volume of accumulated air bubble. The pump gives the **Accumulated Air** alarm when the accumulation air bubble volume exceeds the alarm limit.
*This function is particularly useful in the following cases: • Patients that are highly sensitive to air (for example infants and pediatrics). • Infusing products creates significant volumes of small air bubbles.			
KVO Rate	0.5ml/h	See *A.7 Infusion Specifications*.	Set the KVO rate. If KVO rate is set to zero, the pump stops infusion when VTBI is completed.
Drip	20d/ml	10 to 60 d/ml	Set the number of drops per milliliter liquid dripping into the drip chamber.
Drip Abnormal	Off	On, Off	Set whether to turn on the **Drop Error** alarm. The switch is turned on: the pump gives the **Drop Error** alarm when the detected drip rate is too fast or too slow. **NOTE:** This setting is activated in **Drip Mode**.

Menu Item	Default	Range	Function
Time Near End	3 min	Off, 1, 2, 3, 4, 5, 6, 7, 8, 9, 10, 15, 20, 25, 30 min	Set for how long the **Time Near End** alarm is triggered since the infusion is completed. The switch is turned off: the pump does not give the **Time Near End** alarm.
Reminder Time	2min	Off, 1, 2, 3, 4, 5 min	Set for how long the **Reminder** alarm is triggered since the pump is last operated. The switch is turned off: the pump does not give the **Reminder** alarm.
Lock Time for No Infusion	3min	Off, 1, 2, 3, 4, 5 min	Set for how long the touchscreen automatically locks since the pump is last operated while the pump is not infusing. When **Off** is selected, the screen will not auto-lock while the pump is not infusing.
Lock Time in Infusion	15 sec	Off, 15 sec, 30 sec, 1min, 2min, 3min, 4min, 5min	Set for how long the touchscreen automatically locks since the pump is last operated while the pump is infusing. When **Off** is selected, the screen will not auto-lock while the pump is infusing.
BolusRate	1200ml/h	See *A.7 Infusion Specifications*.	Set the bolus rate.
Max. Rate	2300ml/h	Same as the rate range. See *A.7 Infusion Specifications*.	Set the upper limit of the rate setting. If the set infusion rate exceeds the limit, the pump prompts you to reconfigure the rate.

Menu Item	Default	Range	Function
Max. VTBI	9999.99ml	Same as the VTBI range. See *A.7 Infusion Specifications*.	Set the upper limit of the VTBI setting. If the set VTBI exceeds the limit, the pump prompts you to reconfigure the VTBI.
Dose Rate Unit	Weight	Weight, Body Surface Area	Set the dose rate unit for Dose Mode. Weight: X/kg/min, X/kg/h, and X/kg/24h, in which X represents ng, µg or mcg, mg, g, mU, U, kU, EU, mmol, mol, mcal, cal, kcal, and mEq are available. Body Surface Area: X/m^2/min, X/m^2/h, and X/m^2/24h, in which X represents ng, µg or mcg, mg, g, mU, U, kU, EU, mmol, mol, and mEq are available.
Microgram Unit	µg	mcg, µg	Sets the display of microgram unit. If mcg is selected, all the units containing µg will be replaced with mcg.
Common Dose Unit	Each dose unit	ng, µg or mcg, mg, g, mU, U, kU, EU, mmol, mol, mcal, cal, kcal, and mEq	Check or uncheck the dose unit.
Common Mode	Rate Mode, Dose Mode, Dose Time Mode and Drip Mode	Each infusion mode	Check or uncheck the infusion mode. The checked infusion mode will be displayed in the infusion mode list of the infusion status area. **Note:** Rate Mode and the checked infusion mode in the infusion status area cannot be unchecked.

Menu Item	Default	Range	Function
Secondary Callback	Off	On, off	Set whether switch to primary infusion after secondary infusion is finished. On: when the secondary infusion is finished, the pump stops infusion or enters KVO infusion mode. You need to switch to the primary infusion screen and start primary infusion manually. Off: when the secondary infusion is finished, the pump starts primary infusion automatically.
Smooth relay in progress alarm	Low Alarm	Close, Prompt, Low Alarm	Sets whether to trigger the **Smooth Relay in Progress** alarm or give prompt during the smooth relay infusion.

NOTE

- **For pumps that are configured with the neonatal settings, you can set some infusion parameters for the neonatal patients in the User Maintenance menu separately. When the patient category is changed to the neonate, the system copies the neonatal settings automatically from the User Maintenance menu to the General Option menu. For the settings of the neonatal patients, see *12.9 The Neonate Configurations*.**
- **If a new patient is admitted, check that the settings are appropriate for the new patient.**

7.3 Department Management

Menu Item	Default	Function
Applied Department	/	Display all departments in the current drug library. The checked department can be displayed in the title area of the drug selection screen. The drug in the drug selection screen switches to the drug of corresponding department. Different drug libraries can be configured for different departments.
Drug Management	/	Add drug, modify drug, and delete drug. • Add a drug by this procedure: select a drug category → select **+ Add Drug** → set drug information → select **Confirm**. • Modify a drug by this procedure: select the drug that needs modifying, modify this drug and select **Confirm**. • Delete a drug by this procedure: select the undesired drug → select **Delete** → select **Yes**. **Note:** The build-in drug is not allowed to be deleted.
Config Management	/	Input the required password to modify the parameter settings of the applied departments. After the parameters of configuration management are changed, the settings of general option and system options of the corresponding department will be changed synchronously.

7.4 System Options

To access the **System Options** menu, follow this procedure:

1. Swipe the touchscreen from top down→ select **Menu** → select **System Options**.
2. Select the desired option.

Menu Item		Default	Function
Sound Volume		6	Set the sound volume. The set range is 0 to 8. **Note:** After the equipment is connected to the BeneVision Central Monitoring System, and the **Minimum Alarm Volume** in the **User Maintenance** menu is set to 0, the **Sound Volume** can be set to 0.
Brightness		4	Set the screen brightness. The set range is 1 to 8.
Brightness On Battery		2	Set the screen brightness when the pump runs on battery power. The set range is 1 to 8.
History Record		/	View the history record.
Export History Record		/	Export the history record.
Night Mode	Switch	Off	Set the night mode switch. The switch is turned on: The pump enters night mode when the set **Start Time** is reached. The switch is turned off: The night mode is not available for the pump.
	Start Time	18:00	Set the start time and end time of the night mode.
	End Time	7:00	
	Sound Volume	2	Set the system volume and screen brightness during night mode.
	Brightness	2	
Department		/	Displays the patient department.
Bed No.		/	Displays the patient bed No.
Nurse Call	Switch	Off	Set the nurse call switch, signal type, trigger type, and alarm level.
	Signal Type	Pulse	
	Trigger Type	NORM. Open	
	Alarm Level	High	
Version Information		/	View the software version, brand library, drug library version, and Wi-Fi module version.

CAUTION

- **Verify the volume and brightness settings before entering the night mode. Pay attention to the potential risk if the setting value is low.**

8 Infusion Modes

The pump provide the following infusion modes:

- Rate Mode
- Dose Mode
- Loading Dose Mode
- Micro-infusion Mode
- Time Mode
- Sequential Mode
- Intermittent Mode
- Dose Time Mode
- Ramp Mode
- Drip Mode

NOTE

- **The BeneFusion nVP ex does not provide the loading dose mode.**

8.1 Rate Mode/Time Mode

In rate mode and time mode, the IV drug therapy continues to infuse at a set rate.

Rate mode and time mode offers three parameters: rate, time and VTBI. When two of these parameters are entered, the third is calculated.

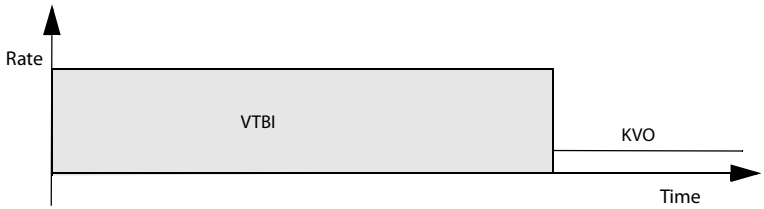

NOTE

- **The above diagram is also applicable for drip mode, dose mode, micro-infusion mode and dose time mode.**

- **When infusing in the rate mode and time mode, you must set rate, but time and VTBI settings are optional.**

8.2 Drip Mode

In drip mode, the IV drug therapy continues to infuse at a set rate.

Drip mode offers three parameters: rate, time and VTBI. When two of these parameters are entered, the third is calculated.

Drop rate set range is (1 to 400) d/min.

The upper range of drop rate is determined by the drip chamber size, the upper range is (400ml/h* drip/ml)/ 60min/h, the unit is d/min, and drip/ml is the drip chamber size.

NOTE

- **When infusing in the drip mode, you must set rate, but time and VTBI settings are optional.**

8.3 Dose Mode

Dose mode allows you to specify the drug amount, diluent volume or concentration for a therapy. Dose mode is typically used for body weight drugs.

Rate and Time are automatically calculated after Weight, Conc., Dose Rate, and VTBI are entered according to the following formulas. Dose Rate and Time are automatically calculated after Rate, Weight, Conc., and VTBI are entered according to the following formulas:

- Rate = Dose Rate* Weight/Conc.
- Dose Rate=Rate*Conc./Weight
- Time = VTBI/Rate
- Conc. = Drug Amt. /Volume

You can change the concentration parameters (**Drug Amt.**, **Volume** or **Conc.**) and weight unit as needed. See *12 Password Protected Settings*.

You can change the units of drug amount, dose rate, and concentration before starting an infusion or when the infusion is paused. To do so, select the corresponding unit of **Drug Amt.**, **Dose Rate** or **Conc.**, and reconfigure in the popup dialog.

NOTE

- **Time can only be obtained by calculation. It is not available for manual input.**
- **Some departments, for example the Neonatology, may use fixed drug amounts, diluent volumes, or concentrations. Using the drug info library to predefine these infusion parameters can simplify the setting process.**

- **For dose mode that involves the use of patient information (e.g. weight and height), relevant patient information will not be directly loaded from the Patient Management screen. Follow the prompts to select whether to use the patient information for infusion.**

8.4 Loading Dose Mode

In the loading dose mode, an infusion is divided into two stages:

- Deliver the loading dose at the loading rate.
- Deliver the remaining volume (**VTBI** minus **Loading Dose**) at the primary rate.

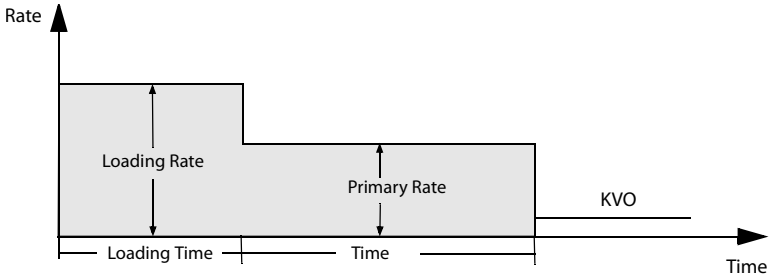

NOTE

- **If you do not configure the loading dose parameters, the pump infuses at the Primary Rate until the set VTBI is finished.**

8.5 Micro-infusion Mode

Micro-infusion mode is typically use for low rate infusions for neonatal and pediatric patients.

Micro-infusion mode offers three parameters: rate, time and VTBI. When two of these parameters are entered, the third is calculated by the pump.

The setting ranges of the parameters in micro-infusion mode are as follows:

Parameters	Range
Rate	0.1 to 100ml/h
VTBI	0.1 to 1000ml

NOTE

- **Rate setting is necessary for an infusion, while time and VTBI are optional in the micro-infusion mode.**

8.6 Sequential Mode

In sequential mode, you can set several parameter groups. Each group defines a set of parameters: rate, time and VTBI. The pump infuses at the set sequence.

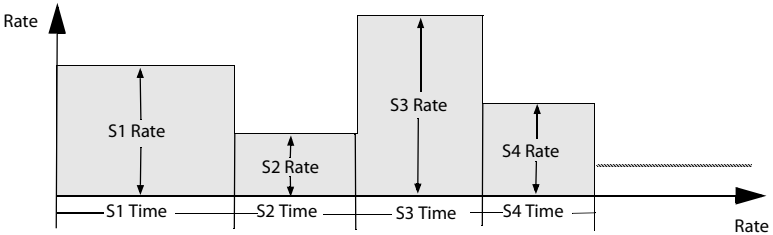

8.6.1 Adding/Deleting Sequences

You can add up to eleven sequences in the sequential mode. To add or delete a sequence, follow this procedure:

1. Select a sequence (such as S1) from the parameter setup screen.
2. In the popup dialog, make the following settings:
   - Select **Add Sequence Upward** to add a sequence before the current sequence.
   - Select **Add Sequence Backward** to add a sequence after the current sequence.
   - Select **Delete** to delete the current sequence.

8.6.2 Changing the Infusion Parameters

You can change the rate of the current sequence during an infusion. If you want to change the time or VTBI of the current sequence, press to pause the infusion and select the desired parameter area to make the change.

To change parameters of other sequences, follow this procedure:

1. Press to pause the infusion.
2. Select .
3. Select the desired parameter area to make the change.

8.7 Intermittent Mode

In the intermittent mode, intermittent infusion and maintenance are performed alternately and circularly.

- Intermittent stage: the pump runs the high rate infusion at the set **Rate** and **Intmt. Vol.**
- Maintenance stage: the pump runs the low rate infusion at the set **Maintain Rate** and **Intmt. Time**. The pump does not infuse at this stage if the **Maintain Rate** is not set.

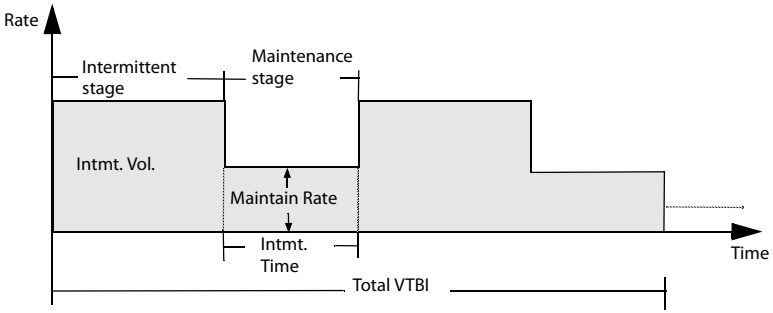

NOTE

- **Total VTBI and Maintain Rate are optional parameters. If the Maintain Rate is not set, infusion stops at the maintenance stage. If the Total VTBI is not set, the infusion stops when the IV container is empty.**

8.8 Ramp Mode

In the ramp mode, the infusion is running at increasing or decreasing rates.

- Ramp up stage: in the set ramp up time, the infusion rate increases until steady rate is reached.
- Steady stage: the pump infuses at a steady rate.
- Ramp down stage: in the set ramp down time, the infusion rate decreases until the set VTBI is completed.

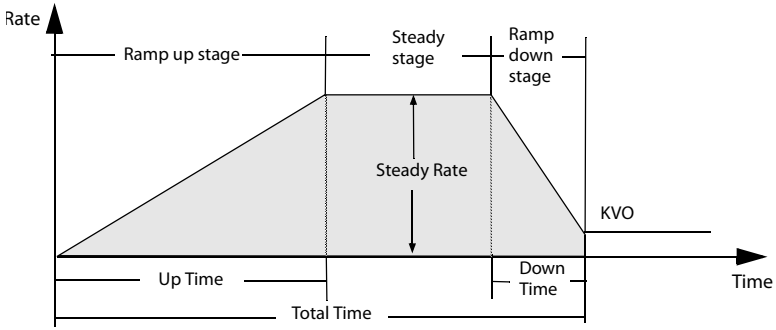

NOTE

- **The Steady Rate can only be obtained by calculation. It is not available for manual input.**
- **Up Time and Down Time are optional parameters. The pump runs an infusion at the steady rate if they are not set.**

8.9 Dose Time Mode

The dose time mode allows the clinician to specify the drug amount, diluent volume or concentration. The dose mode is typically used for body weight independent drugs.

Rate and Time are automatically calculated after Conc., Dose Rate, and VTBI are entered according to the following formulas. Dose Rate and Time are automatically calculated after Rate, Conc., and VTBI are entered according to the following formulas:

- Rate = Dose Rate/Conc.
- Dose Rate=Rate*Conc.
- Time = VTBI/Rate
- Conc. = Drug Amt. /Volume

You can change the concentration parameters (**Drug Amt.**, **Volume** or **Conc.**) as needed. See *12 Password Protected Settings*.

You can change the units of drug amount, dose rate, and concentration before starting an infusion or when the infusion is paused. To do so, select the corresponding unit of **Drug Amt.**, **Dose Rate** or **Conc.**, and reconfigure in the popup dialog.

In the dose time mode, the supported dose rate units are X/min, X/h, and X/24h, in which X represents ng, µg or mcg, mg, g, mU, U, kU, EU, mmol, mol, mcal, cal, kcal, and mEq.

NOTE

- **Time can only be obtained by calculation. It is not available for manual input.**

9 Drug Library/Drug Info Library

The pump can be configured with a drug library or a drug info library, which predefines drugs, concentrations, occlusion pressure levels and other infusion parameters. Using a drug library or drug info library simplifies the infusion operation, and reduces the risk of operation fault.

The difference of the drug library and the drug info library are as follows:

- Software license is required to activate imported drug library. See *9.1 License*.
- The drug library supports Dose Error Reduction Systems (DERS). See *9.3 Dose Error Reduction Systems (DERS)*.
- With the drug info library, the infusion modes (**Rate Mode** and **Dose Mode**) can be predefined.

The drug library and the drug info library are created, edited, and imported via their respective PC programs. They have the following features:

- Supporting 5000 drug names.
- At least 30 colors are available for drug marking.
- Supporting at least 30 drug categories.
- Predefining drugs, concentrations, occlusion pressures, KVO rate, bolus volume limit.

CAUTION

- **The drug library and the drug info library should be created by professionals. Checked that the drug and parameter settings are suitable for the care area before use.**

9.1 License

To use drug library in your pump, software license is required.

9.1.1 Checking the Licenses

To check the license, follow this procedure:

1. Swipe the touchscreen from top down → select **Menu** → select **User Maintenance** → input the required password → select ↵.
2. Select **License**.

3. Select **Local License.**

9.1.2 Installing the Licenses

To install the licenses, follow this procedure:

1. Connect the USB drive with the licenses in to the pump's USB connector.
2. Swipe the touchscreen from top down → select **Menu** → select **User Maintenance** → input the required password → select ↵.
3. Select **License**.
4. Select **External License.**
5. Select **Import**.

9.2 Importing the Drug Library/Drug Info Library

The drug library and the drug info library can be imported to this pump after being created via the PC program. To import a drug library or drug info library, follow this procedure:

1. Connect the USB drive with the drug library or drug info library to the pump's USB connector.
2. Swipe the touchscreen from top down → select **Menu** → select **User Maintenance** → input the required password → select ↵.
3. Select **Import and Export**.
4. Select **Select Drug Library** area, and select a drug library or drug info library.
5. Select **Import** → select **Drug Library** → select **Confirm**.
6. Wait till the import succeeds, and select **OK**.
7. Press and hold the power switch and select **Turn Off** to turn off the pump. The pump activates the imported drug library automatically.

After the pump is restarted, the pump will prompt you if the activation fails.

The pump loads the predefined infusion parameters from the drug library or the drug info library after a drug has been selected.

If the pump is connected to the CMS via the Dock and wireless LAN, the drug library and the drug info library can be imported to this pump via the CMS.

CAUTION

- **The facility is responsible for performing initial checks to ensure that the proper drug library is loaded.**

NOTE

- **The predefined parameters can be changed during a therapy. This does not affect the embedded library.**

9.3 Dose Error Reduction Systems (DERS)

DERS is for drug library only. If the predefined parameter limit is violated during a therapy, the pump gives prompts.

9.3.1 Hard Limits

If the set rate, dose rate, or bolus rate exceeds the lower or upper hard limit configured in the drug library, the setting will be rejected. Reconfigure the parameter as needed.

9.3.2 Soft Limits

If the set rate, dose rate, or bolus rate exceeds the lower or upper soft limit configured in the drug library, you can choose to accept or reject the setting.

- Accept the current setting: The current setting takes effect. The parameter that exceeds the soft limit is marked with an orange background.
- Reject the current setting: The pump returns to the previous menu, and you need to make the setting again.

9.4 Predefining the Infusion Mode

You can predefine the infusion mode and corresponding parameters in the drug info library. When the drug is selected, the pump automatically load the infusion mode and corresponding parameters.

This page intentionally left blank.

10 Managing Patient

10.1 Discharging/Admitting a Patient

Before admitting a new patient, discharge the previous patient. After the patient is discharged, all patient data are removed from the pump. After a patient is discharged, the pump automatically admit a new patient.

The patient is automatically discharged in the following cases:

- After the patient data is successfully exported through the USB drive. For more information, see *10.3 Exporting Patient Information*.
- After the patient is discharged by the CMS or the patient monitor.
- After the pump is turned off with **Immediate Discharge** selected in the patient information settings. For more information, see *12.3 The Patient Information Settings*.

To manually discharge a patient, follow this procedure:

1. Swipe the touchscreen from top down → select **Menu** → select **Discharge Patient**.
2. Select **Accept**.

WARNING

- **Always discharge the previous patient before starting an infusion. Failure to do so can lead to data being attributed to the wrong patient.**

10.2 Inputting/Editing Patient Information

The pump supports the use of barcode readers. The content scanned by the barcode reader is filled into the Patient ID field by default. You can change the setting in *12.3 The Patient Information Settings*.

To input patient information with the barcode reader, follow this procedure:

1. Connect the barcode reader to the pump's USB connector.

2. Swipe the touchscreen from top down → select **Menu** → select **Patient Management**.

3. Scan the patient barcode.

Edit patient information after a patient has been admitted, or when patient information is incomplete, or when you want to change patient information.

To edit patient information, follow this procedure:

1. Swipe the touchscreen from top down → select **Menu** → select **Patient Management**.
2. Edit patient information as required.

10.3 Exporting Patient Information

To export the information of the current patient to the USB drive, follow this procedure:

1. Connect the USB drive to the USB connector. If the pump is connected with the BeneFusion nDS Infusion Supervision System, connect the USB drive to the Dock's USB connector.
2. Swipe the touchscreen from top down → select **Menu** → select **Patient Management** → select **Export Patient Information**.
3. Select **OK**.

Exporting the patient information automatically discharge the patient.

10.4 Importing Patient Information

To import the patient information from the USB drive, follow this procedure:

1. Connect the USB drive to the USB connector. If the pump is connected with the BeneFusion nDS Infusion Supervision System, connect the USB drive to the Dock's USB connector.
2. Swipe the touchscreen from top down → select **Menu** → select **Patient Management** → select **Import Patient Information**.
3. Select **OK**.

11 Networked Communication

The equipment can be connected to the BeneFusion nCS Infusion Supervision System (hereafter referred to as “nCS”), BeneVision Central Monitoring System (hereafter referred to as “CMS”), anesthesia system, control software, patient monitors and the eGateway.

11.1 Network Safety Information

CAUTION

- **Wireless network designing, deploying, debugging, and maintenance should be executed by the service personnel or authorized technicians.**
- **Always set the wireless network according to local wireless regulations.**
- **Data communication for all network functions must be performed within a closed network or within a virtually isolated network provided by a hospital. The hospital is responsible for ensuring the security of the virtually isolated network.**
- **Keep network authentication information, for example password, safe, protecting the network from being accessed by unauthorized users.**
- **Do not connect non-medical devices to the network.**
- **If wireless network signal is poor, there may be a risk of nCS or CMS data loss.**
- **RF interference may result in wireless network disconnection.**
- **Disconnecting from the network may result in nCS or CMS data loss and function failure. Check the patient in case of network disconnection and solve the network problem as soon as possible.**
- **Ensure that the IP address setting is correct. Changing the network settings may result in network disconnection. Contact your service personnel if you have any problems on setting the IP address.**

11.2 Connecting the Equipment to the nCS / CMS

The equipment can be connected to the nCS or CMS through the wireless network or the Dock. When connected to the nCS or CMS, the system provides the following functions:

■ The equipment can transmit infusion information, alarm information, and equipment information (such as battery and network) to the nCS or CMS.

- Patient information can be synchronized between the equipment and the nCS, or between the equipment and the CMS.
- Patient can be admitted and discharged by the nCS or CMS, and patient information can be transmitted to this equipment.
- Configuration files can be assigned from the CMS to the equipment.

For more information, see *BeneFusion nCS Infusion Supervision System and BeneVision Central Monitoring System Operator's Manuals*.

To connect the equipment to the nCS or CMS, follow this procedure:

1. Set the **IP Address**, **Subnet Mask**, and **Gateway**. For more information, see *12.5.2 The WLAN IP Settings*.
2. Connect the equipment to the nCS or CMS through any of the following methods:
   - Admit the equipment on the nCS or CMS. Refer to the *BeneFusion nCS Infusion Supervision System and BeneVision Central Monitoring System Operator's Manuals* for details of admitting an equipment.
   - Pair the equipment on the CMS. Refer to the *BeneVision Central Monitoring System Operator's Manual* for details of pairing an equipment.
   - Set the **Central Station IP Address** in the **User Maintenance** menu, and the equipment automatically search and connected to the corresponding nCS or CMS. For the setting of **Central Station IP Address**, see *12.5.3 The Central Station Setup*.

When the equipment is used with the Dock and the Dock is connected to the nCS or CMS, the equipment can be automatically connected to the nCS or CMS. For more information, see *BeneFusion nDS and BeneFusion eDS Infusion Supervision System Operator's Manuals*.

NOTE

- **The equipment can communicate with the nCS or CMS only when it is properly connected. If the network is interrupted, you are not able to view the infusion information through the nCS or CMS.**

11.3 Connecting the Equipment to the Control Software

The equipment can be connected to the control software by configuring the network. The control software runs with the CMS in the same environment. For the connection between the equipment and the control software, see *11.2 Connecting the Equipment to the nCS / CMS*.

11.4 Connecting the Equipment to the Anesthesia System

The equipment can be connected to the anesthesia system by configuring the network. For detailed information, see the operator's manual of the corresponding anesthesia system.

11.5 Connecting the Equipment to the Monitor

The equipment can be connected to the BeneVison N series (except for the BeneVison N1) patient monitor when used with the BeneFusion nDS Infusion Supervision System.

The equipment can transmit the infusion and alarm information to the patient monitor. On the patient monitor, you can view the infusion information from the **Integrated Devices** screen and infusion trends from the **InfusionView** screen. For the detailed information, see the *BeneVison N series Operator's Manual*.

11.6 Connecting the Equipment to the eGateway

The equipment can be connected to the eGateway when used with the BeneFusion nDS Infusion Supervision System. When connected to the eGateway, the system provides the following functions:

- The equipment can transmit infusion information and drug information to the eGateway.
- Patient information can be synchronized between the equipment and the eGateway.

11.7 Controlling the Equipment Remotely

Via wireless network connection, the remote control function enables remotely controlling the equipment in the nCS, control software and anesthesia system. With this function, infusion parameters on the equipment can be set directly from the nCS, control software and anesthesia system to support safe and effective infusion therapy. The remote control function is intended for use in highly controlled environments such as isolation wards and hybrid operating rooms where clinical professionals can make direct and visual confirmation of infusion parameters on the equipment to ensure accurate and correct settings.

With the connection between the equipment and nCS, or between the equipment and control software, remote control operations can be performed only after the specified license is imported into the equipment and the remote control switch is turned on. For details, see *9.1.2 Installing the Licenses* and *12.6 The Remote Control Settings*.

The supported remote operations in the nCS and control software are as follows:

- Setting infusion parameters. Supported configurations involve setting infusion modes (including rate mode, time mode, micro-infusion mode, drip mode, dose mode, dose time mode and ramp mode), managing secondary infusion, setting infusion parameters (including Rate, Time, VTBI**,** Rate-Sec., Time-Sec.**,** VTBI-Sec.,

Rate-Pri., Time-Pri., VTBI-Pri., BolusVTBI, Bolus Dose and dose unit, BolusRate, BolusTime, Dose Rate and Dose Rate Unit, drug concentration and its unit, drug volume & diluent volume and their units, Weight, Body Surface Area, Total Time, Up Time, Down Time, KVO Rate, occlusion pressure levels), setting relay infusion, starting infusion, titration, setting bolus for primary and secondary infusions, stopping infusion, entering standby mode, resetting low-priority alarms, pausing alarm sound, clearing Past 24h Total, setting bubble size limit and accumulated air limit as well as Secondary Callback.

- Displaying infusion information. The information that can be displayed involves patient symbol, bed number, department, name, prompts, battery symbol, battery charge, system time, night mode symbol, activation status symbol, customized relay symbol, circular relay symbol, infusion modes (including rate mode, time mode, micro-infusion mode, drip mode, dose mode, dose time mode and ramp mode), infusion parameters (including drug name, brand and specification, Rate, Time, VTBI, Rate-Sec., Time-Sec., VTBI-Sec., Rate-Pri., Time-Pri., VTBI-Pri., BolusVTBI, Bolus Dose and dose unit, BolusRate, BolusTime, current occlusion pressure, occlusion pressure levels, Dose Rate and Dose Rate Unit, drug concentration and its unit, drug volume & diluent volume and their units, Weight, Body Surface Area, Total Time, Up VTBI / Down VTBI / Steady VTBI, Up Time/Down Time /Steady Time, Up Rate/Down Rate/ Steady Rate), KVO Time, Past 24h Total, alarms and standby status.

With the connection between the equipment and the anesthesia system, remote control operations can be performed only after the remote control switch is turned on. The supported remote operations are as follows:

- Setting infusion parameters. Supported configurations involve setting infusion modes (including rate mode, dose mode, loading dose mode and drip mode), setting infusion parameters (including Rate, VTBI, Time, BolusVTBI, Bolus Dose and dose unit, BolusRate, BolusTime, Weight, Body Surface Area, drug concentration and its unit, drug volume & diluent volume and their units, Dose Rate and Dose Rate Unit, occlusion pressure levels, Loading Rate, Loading Dose, Loading Time, Primary Rate and Primary Time), starting infusion, titration, stopping infusion, setting bolus infusion, resetting low-priority alarms and pausing alarm sound.
- Displaying infusion information. The information that can be displayed involves patient symbol, bed number, department, name, prompts, battery symbol, battery charge, system time, night mode symbol, activation status symbol, customized relay symbol, circular relay symbol, infusion modes (including rate mode, dose mode, loading dose mode and drip mode), infusion parameters (including drug name, brand and specification, Rate, VTBI, Volume, Time, BolusVTBI, Bolus Dose and dose unit, BolusRate, BolusTime, current occlusion pressure, occlusion pressure levels, Weight, Body Surface Area, drug concentration and its unit, drug volume & diluent volume and their units, Dose Rate and Dose Rate Unit, Loading Rate, Loading Dose, Loading Time, Primary Rate and Primary Time), KVO Time, alarms and standby status.

NOTE

- **The remote control function is not supported during the smooth relay infusion if the software versions of pump and control software are mismatched. Contact the service personnel for upgrading.**
- **Under remote control, always refer to the data displayed on the pumps as the first priority.**

This page intentionally left blank.

12 Password Protected Settings

User maintenance enables you to customize your equipment to best meet your needs. Accessing the **User Maintenance** menu is password protected.

This chapter describes the settings and functions in the **User Maintenance** menu.

CAUTION

- **The maintenance settings can only be changed by authorized personnel. Contact your department manager or biomedical engineering department for the passwords used at your facility.**

12.1 Accessing the User Maintenance Menu

To access the **User Maintenance** menu, follow this procedure:

1. Swipe the touchscreen from top down → select **Menu** → select **User Maintenance** → input the required password → select ↵.
2. Select desired tab.

12.2 The Device Management Settings

Menu Item	Default Setting	Function
Facility	/	Inputs the facility, the department location and the device name.
Department Location		
Device Name		
Device ID	/	Displays the device ID.
QR Code Type	Device ID	• **Device ID**: The QR code number is composed of MRD# + Device ID. • **Assets No.**: The QR code number is composed of QR Code Prefix + Assets No.
QR Code Prefix	/	Inputs the QR code prefix.
Assets No.	/	Inputs the asset number.

12.3 The Patient Information Settings

Menu Item	Default Setting	Function
Patient ID	On	Selects whether the items can be displayed and edited in the **Patient Management** screen.
Visit Number	Off	
Barcode Content Fill to	Patient ID	Fills the content scanned by the barcode reader into the **Patient ID** or **Visit Number** field in the **Patient Management** screen.
Patient Location	Fixed	• **Fixed**: After a patient is discharged, only patient data are removed from the pump, the Bed No. and Room No. are retained. • **Unfixed**: If the pump is connected to the Dock, after a patient is discharged, only patient data are removed from the pump, the Bed No. and Room No. are retained. If the pump is not connected to the Dock, after a patient is discharged, patient data, Bed No., and Room No. are all removed from the pump.
Auto Discharge When Power Off	Never	• **Never**: The patient is not discharged automatically after the pump is powered off. • **Immediate Discharge**: If the pump is connected to the Dock, after the pump is powered off, the current patient of the pump is discharged. If the pump is not connected to the Dock, after the pump is powered off, the current patient is discharged.

12.4 System Calibration

Menu Item	Default Setting	Function
Accuracy Calibration	/	Contact your service personnel to perform the calibration as per the recommended frequency in *13.2 Maintenance and Testing Schedule*.
Pressure Calibration	/	Contact your service personnel to perform the calibration as per the recommended frequency in *13.2 Maintenance and Testing Schedule*.
Data Review	/	Reviews the calibration data.
Testing Data Review	/	Reviews the testing data.

12.5 Network Setup

12.5.1 The WLAN Settings

Menu Item		Default Setting	Function
SSID		/	/
Password		/	/
Security		Open	Selects the security method.
WLAN Setup	WLAN Band	2.4GHz	Sets the WLAN band.

12.5.2 The WLAN IP Settings

Menu Item	Default Setting	Function
DHCP Switch	On	Selects whether to enable the function of automatically getting the IP address.
IP Address	0.0.0.0	Sets the **IP Address**, **Subnet Mask** and **Gateway**. **Note:** These settings are not available if DHCP switch is turned on.
Subnet Mask	0.0.0.0	
Gateway	0.0.0.0	
MAC Address	/	

12.5.3 The Central Station Setup

Menu Item	Default Setting	Function
Central Station IP Address	0.0.0.0	Sets the central station IP address.

12.5.4 The Device Discover Settings

Menu Item	Default Setting	Function
Multicast TTL	1	Multicast helps device discovery between pumps and between pumps and CMS. Devices in the same multicast group can be mutually discovered.
Multicast Address	225.0.0.8	

12.5.5 The Cert Manage Settings

Menu Item	Default Setting	Function
Local Cert Manage	/	**Delete**: deletes the selected certifications.
USB Cert Manage	/	**Import**: imports the selected certifications from the USB drive.

NOTE

- **The number of certifications to be imported and the local certifications cannot exceed 20 in total.**

12.6 The Remote Control Settings

Menu Item	Default Setting	Function
Anesthesia System, Anesthesia System & CMS	Off	Selects whether the pump can be remotely controlled. Without the CMS remote control license imported into the pump, the switch is displayed as “Anesthesia System”. With the CMS remote control license imported into the pump, the switch is displayed as “Anesthesia System & CMS”.
Control Authorization Code	/	Displays the control authorization code of the current pump. Remote control of the pump is enabled after the authorization code is input in the interconnected device. For details, see *BeneFusion nCS Infusion Supervision System and BeneVision Central Monitoring System Operator's Manuals*.
Change Control Authorization Code	/	Changes the current control authorization code. The 4-digit authorization code is generated randomly and cannot be edited.

12.7 The Brand Management

Menu Item	Default Setting	Function
Common Brand	/	Checks or unchecks the brand, and select **Confirm**. The checked brand will be displayed in the brand list.
Add Brand	/	Adds a brand by this procedure: input the brand name → select a type (**Regular**, **Filter**, **Light-sensitive, Transfusion** or **Nutrition**) → select **Confirm**. The added brand is displayed in the **Common Brand** menu.
Delete Brand	/	Selects the undesired brand, and select **Confirm** to delete this brand. **Note:** The build-in brand is not allowed to be deleted.
Modify Brand	/	Selects the brand that needs modifying, modify this brand and select ↵. **Note:** The build-in brand is not allowed to be modified.

NOTE

- **Up to 64 brands are available in this pump.**

12.8 The Time and Language Settings

Menu Item	Default Setting	Function
Date	/	Sets the current date.
Time	/	Sets the current time.
Date Format	yyyy-mm-dd	Sets the date format.
24 h	On	Sets the time format. If you want to use the 12-hour mode, switch off 24 hour time.
Language	/	Sets the language. **Note:** This setting is effective after the pump has been restarted.

12.9 The Neonate Configurations

Menu Item	Default Setting	Function
Max. Rate	500 ml/h	Sets the upper limit of the rate setting for the neonatal patients.
OcclusionPressure	450 mmHg	Sets the alarm limit of **Occlusion** alarm, **Air in Line** alarm, and **Accumulated Air** alarm for the neonatal patients.
Bubble Size	50 µl	
Accumulated Air	0.2 ml/15 min	
BolusRate	200 ml/h	Sets the bolus rate for the neonatal patients.
BolusVTBI	50 ml	Sets the upper limit of the bolus VTBI for the neonatal patients. If the set VTBI exceeds the limit, the pump prompts you to reconfigure the VTBI.

12.10 The Parameter Switch Settings

Menu Item	Default Setting	Function
15 ul	Off	If this switch is turned on, 15 µl is available for the **Bubble Size** setting.
50 mmHg	Off	If this switch is turned on, 50 mmHg is available for the **OcclusionPressure** setting.

12.11 The Unit Settings

Menu Item	Default Setting	Function
Pressure Unit	mmHg	Sets the pressure unit. The options include: mmHg, kPa, bar, and psi.
Weight Unit	kg	Sets the weight unit. The options include: kg and lb.
Height Unit	cm	Sets the height unit. The options include: cm and inch.

12.12 The Alarm Settings

Menu Item	Default Setting	Function
Alarm Sound	Sound2	Sets the alarm sound mode.
Empty Sensitivity	Low	Sets the sensitivity for detecting the **Empty** alarm. The higher the sensitivity is, the shorter the response time is for giving the **Empty** alarm. **Off**: Turn off the **Empty** alarm.
CMS/eGW Disconnected Alarm	Off	Sets whether the disconnection alarm will be triggered when the pump is disconnected from the CMS or eGateway.
Strengthen Time Near End	Off	Sets whether to strengthen the **Time Near End** alarm. If this switch is turned on, after the **Time Near End** alarm is triggered, the yellow alarm lamp flashes, and the alarm sound interval can be shorten.
Minimum Alarm Volume	1	Sets the minimum alarm volume. The set range is 0 to 8.

12.13 The Bolus Volume Unit Setting

Menu Item	Default Setting	Function
Bolus Volume Unit	ml	Sets the unit of bolus volume.

12.14 The Bolus Limit Settings

Menu Item	Default Setting	Function
Auto	50ml	Sets the upper limit of the auto bolus volume setting. If the set bolus volume exceeds the limit, the pump prompts you to reconfigure the bolus volume. The setting range is 0.1 ml to 99.99 ml.
Manual	3ml	Sets the maximum volume of a manual bolus infusion. The manual bolus infusion stops when the set volume is reached. The setting range is 1 ml to 20 ml.

NOTE

- **The range of auto bolus volume can be expanded. Contact our service personnel to configure the range if needed.**

12.15 The Purge Limit Setting

Menu Item	Default Setting	Function
Purge Limit	15ml	Sets the maximum volume of the purge. The purge stops when the set volume is reached. The setting range is 2 ml to 100 ml.

12.16 The Prescription Setup

Menu Item	Default Setting	Function
Prescription Infusion Mode	Rate Mode	Sets the infusion mode after the prescription is accepted. The options include: Rate Mode, Dose Mode and Dose Time Mode.
Prescription Received	On	Sets whether enter the prescription details screen after the prescription is accepted. If this switch is turned on, the prescription details screen displays after the prescription is accepted. • **Accept**: The prescription parameters are loaded. • **Reject**: The prescription parameters are not loaded. If this switch is turned off, the prescription parameters are automatically loaded after the prescription is accepted.

12.17 The Parameter Memory Setting

Menu Item	Default Setting	Function
Para. Memory	Off	Sets the parameter memory switch. If this switch is turned on, the pump can automatically reload the infusion mode and other infusion parameters when restarted if the same drug has been selected.

12.18 The Loading Guide Setting

Menu Item	Default Setting	Function
Loading Guide	On	Sets whether enter the loading guide screen when the infusion set is not loaded.

12.19 The Brand Selection Setting

Menu Item	Default Setting	Function
Brand Selection	On	Sets whether the brand list will be displayed after the infusion set is loaded or replaced.

12.20 The Auto-Restart Setting

Menu Item	Default Setting	Function
Auto-restart	On	Sets whether to restart the infusion or not when the occlusion pressure is reduced.

12.21 The Drug Selection Popup Setting

Menu Item	Default Setting	Function
Drug Selection Popup	On	The infusion set is loaded after the pump is powered on, or exit the loading guide screen: • **On**: Enter the drug selection screen. • **Off**: Enter the infusion parameters setting screen.

12.22 The Department Management

Menu Item	Default Setting	Function
Drug Management	Off	Sets the drug management switch. If this switch is turned on: • In the department management screen, you can add drug, modify drug, and delete drug. • In the drug selection screen, you can add drug.

Menu Item	Default Setting	Function
Applied Department Password	Off	Sets the switch of applied department password. If this switch is turned on, before entering the applied department screen, you need to input the required password.

12.23 The Drop Sensor Setting

Menu Item	Default Setting	Function
Drop Sensor	Off	Sets the drop sensor switch.

12.24 The KVO Setting

Menu Item	Default Setting	Function
KVO	On	Selects whether to enable the KVO function.

12.25 The Concentration Setting

Menu Item	Default Setting	Function
Concentration Config	Conc.	Sets the concentration parameter for **Dose Mode** and **Dose Time Mode**. • **Conc.**: The concentration parameter is displayed as **Conc.** in the above mode. • **Amount & Volume**: The concentration parameter is displayed as **Drug Amt.** and **Volume** in the above mode.

12.26 Enabling Password Unlock

Menu Item	Default Setting	Function
Password Unlock	Off	If enabled, a password is required to unlock the screen.

12.27 Modifying the Password

Menu Item	Default Setting	Function
Modify User Maintenance Password	/	Modifies the password for accessing the **User Maintenance** menu.
Modify Unlock Password	/	Modifies the password for unlocking the touchscreen. **Note:**When modifying the password for the first time, input the **User Maintenance** password for the old password.

12.28 Import and Export

Menu Item	Default Setting	Function
Select Config File	/	Imports configuration file, drug library or brand library by following this procedure: connect the USB drive with the configuration file, drug library or brand library to the pump's USB connector → select **Import and Export** → select the file as needed → select **Import**.
Select Drug Library		
Brand Library		
Import		
Export Config	/	Exports configuration, brand library, or drug library to the USB drive by following this procedure: connect the USB drive to the pump's USB connector → select **Import and Export** → select **Export Config** or **Export Brand Library** or **Export DrugLib** → enter the name of the file to be exported → select **Export**.
Export Brand Library		
Export DrugLib		

12.29 License

Menu Item	Default Setting	Function
MID	/	/
Local License	/	Views the licenses of the drug library and CMS remote control.
External License	/	Installs the licenses of the drug library and CMS remote control. For detailed information on how to install the license, see *9.1.2 Installing the Licenses*.

12.30 Viewing the Version Information

Menu Item	Default Setting	Function
Version Information	/	Displays Software Version, Compile Time, Driver Software, Power Software, Algorithm, etc.

12.31 The Maintenance Prompt Settings

Menu Item	Default Setting	Function
Maintenance Prompt	Off	Sets the maintenance prompt switch. If this switch is turned on, and the next maintenance date is reached, the pump prompts you at startup.
Next Maintenance Date	/	Displays the next maintenance date of the device.

13 Maintenance

Regular maintenance is essential to ensure that the equipment functions properly. This chapter contains information on periodic testing and maintenance.

13.1 Maintenance Safety Information

WARNING

- **To avoid electric shock, stop using the equipment if you find the housing of the equipment has signs of broken. Contact the service personnel for help in that case.**
- **Failure on the part of the responsible individual hospital or institution using this equipment to implement a recommended maintenance schedule may cause undue equipment failure and possible health hazards.**
- **No modification of this equipment is allowed.**
- **This equipment contains no user serviceable parts.**
- **The safety checks or maintenance involving any disassembly of the equipment should be performed by professional service personnel. Otherwise, undue equipment failure and possible health hazards could result.**
- **The service personnel must be properly qualified and thoroughly familiar with the operation of the equipment.**

CAUTION

- **The equipment and accessories shall not be served or maintained while in use with a patient.**
- **If you discover a problem with the equipment, such as the product label falls off, contact your service personnel.**

NOTE

- **If calibration is required, contact our service personnel.**

- **If needed, contact the manufacturer for circuit diagrams, component part lists, descriptions, calibration instructions, or other information concerning the repair of the equipment.**

13.2 Maintenance and Testing Schedule

Follow the maintenance and testing schedule or local regulations to perform testing and maintenance. Make sure to clean and disinfect the equipment before taking any tests and maintenance.

The following table lists the maintenance and testing schedule:

Test/Maintenance Item		Recommended Frequency
Performance Tests		
Tests required by IEC 60601-2-24:2012		• Once every three years. • When you suspect that the occlusion alarm is abnormal. • When you suspect that the rate is abnormal.
Safety Tests		
Electrical safety tests		• Once every three years, or if required. • When the power board is repaired or replaced. • When the main board is replaced. • When the equipment drops to the ground.
Other Tests		
Visual inspection		Every day, before first use.
Power-on test		Each time the equipment is powered on.
Battery check	Functionality test	• When the battery is first installed. • When the battery is replaced.
	Performance test	Every three months or if the battery runtime reduces significantly.
Pressure calibration, and accuracy calibration.		If the performance test fails. For more information, see the service manual.

13.3 Testing Methods and Procedures

Except the following maintenance tasks, all other test and maintenance tasks should be performed by the qualified service personnel only.

- Regular check, including visual inspection and power-on test
- Battery check

If your equipment needs a safety test and performance test, contact the service personnel.

13.3.1 Performing Visual Inspection

Visually inspect the equipment before it is first used every day. If you find any signs of damage, remove the equipment from use and contact the service personnel.

Verify that the equipment meets the following requirements:

- Environment and power supply specifications are met.
- The equipment housing and display screen are free from cracks or other damages.
- The power cord is not damaged and the insulation is in good condition.
- Connectors, plugs, and cables are not damaged and kinked.
- Power cord and cable are securely connected with the equipment.
- The door is free from obvious deformation or looseness.
- The equipment is securely fixed, and not loose.

13.3.2 Performing Power-on Test

The equipment automatically performs a selftest at startup. Check the following items for the power-on test:

- The equipment powers on properly.
- The alarm system works properly.
- The equipment displays properly.
- There is no abnormal noise when opening or closing the door.
- There is no abnormal noise when the pump is running.

13.3.3 Checking the Battery

See steps 1 to 6 of *13.4.4 Conditioning the Battery* to check battery performance. The operating time of the battery reflects their performance directly. If the operating time of a battery is noticeably shorter than that stated in the specifications, the battery may reach its service life or malfunction. If the battery performance meets the requirement, fully charge the battery again for use or charge it to 40 – 60% for storage.

13.4 Maintaining the Battery

This equipment is designed to run on rechargeable battery power when the external power is not available. The equipment can switch between battery power and the external power without interrupting working. If both the external power and the battery

power are available, the equipment uses the external power in preference to the battery power.

13.4.1 Battery Safety Information

WARNING

- **Use only specified battery. Use of a different battery may present a risk of fire or explosion.**
- **Do not crush, drop or puncture the battery. Mechanical abuse can lead to internal damage and internal short circuits. If a battery has been dropped or banged against a hard surface, whether damage is externally visible or not, remove the battery from use and dispose of it properly.**
- **If the battery shows signs of damage or signs of leakage, replace it immediately. Use caution in removing the battery. Avoid contacting the leakage.**
- **Extremely high ambient temperature may cause battery overheat protection, resulting in equipment shutdown.**
- **The lithium-ion battery has a service life. Replace your battery when it reaches the end of its service life. Failure to replace the battery may cause serious damage to your equipment from battery overheating.**
- **Do not open the battery, heat the battery above 60 °C, incinerate battery, or short battery terminals. They may ignite, explode, leak or heat up, causing personal injury.**

CAUTION

- **Remove the battery if it will not be used for an extended period of time.**

NOTE

- **Storing the battery at high temperature for an extended period of time will significantly shorten their life expectancy.**
- **Storing the battery in a cool place can slow the aging process. Ideally the battery should be stored at 15 °C.**

13.4.2 Installing the Battery

The battery must only be installed by service personnel trained and authorized by Mindray Scientific. To install the battery, contact your service personnel. The battery is installed when the equipment leaves the factory.

Replace a battery in the following situations:

- The battery has visual signs of damage.
- The battery fails.
- The battery is aged and its runtime significantly shorter than the specification.
- The battery service life expires.

CAUTION

- **Lithium batteries replaced by inadequately trained personnel could result in a hazard, such as excessive temperatures, fire or explosion.**
- **Properly dispose of the battery according to local regulations.**

13.4.3 Charging the Battery

To optimize performance, a fully or nearly fully discharged battery should be charged as soon as possible. The battery is recharged automatically when the equipment is connected to AC mains power.

NOTE

- **The battery should be charged only in this equipment.**
- **When this equipment is used with a Dock, and the Dock is connected to the AC power source, the battery is charged automatically.**
- **Check the battery for adequate power when the equipment runs on battery power. Charging the battery if required.**

13.4.4 Conditioning the Battery

The service life of a battery depends on how frequently it is used. If properly used, the lithium-ion battery has a service life of approximately three years. If improperly used, its service life can be shortened. It is recommended to replace the battery every three years.

The performance of the battery deteriorates over time. You should condition the battery every two months.

To condition a battery, follow this procedure:

1. Disconnect the equipment from the patient.
2. Turn off the equipment, and connect the equipment to the external power source.
3. Allow the battery to be charged uninterruptedly till it is fully charged.
4. Disconnect the equipment from the external power source, and turn on the equipment.
5. Allow the equipment to run on the battery until the battery is completely depleted and the equipment automatically shuts down.

6. Fully charge the battery again for use or charge it to 40 – 60% for storage.

NOTE

- **If the battery is not conditioned for a prolonged time, its charge indication may not be accurate and you may wrongly evaluate the remaining battery runtime.**
- **Do not use the pump for infusion during battery conditioning.**
- **Do not interrupt battery conditioning.**

13.5 Checking Version Information

To view the system software version, brand library version, drug library upgrade time, and Wi-Fi version, follow this procedure:

1. Swipe the touchscreen from top down → select **Menu** → select **User Maintenance** → input the required password → select ↵.
2. Select **Version Information**.

13.6 Checking the History Record

The **History Record** menu shows the history of pump activities, including the infusions, alarms, calibrations, maintenance configurations, and other operations.

To access the **History Record** menu, follow this procedure:

1. Swipe the touchscreen from top down→ select **Menu** → select **System Options**.
2. Select **History Record**.

NOTE

- **A total loss of power has no impact on the history records stored.**
- **Alarms are saved as events and will remain if the equipment is powered down. The time of equipment power down is also recorded as an event.**
- **The pump stores at least 3500 events. When the capacity is reached, earlier events will be overwritten by later ones.**

13.7 Exporting the History Record

To export the history record, follow this procedure:

1. Connect the USB drive to the USB connector.
2. Swipe the touchscreen from top down→ select **Menu** → select **System Options**.
3. Select **Export History Record**.

13.8 Disposing of the Equipment

The service life of this equipment is ten years. Dispose of the equipment when its service life is reached. Follow local regulations regarding the disposal of such product.

WARNING

- **For disposal of parts, batteries, packaging materials, and accessories, where not otherwise specified, follow local regulations regarding disposal of hospital waste.**

This page intentionally left blank.

14 Care and Cleaning

In this chapter we only describe cleaning and disinfection of the pump, pole clamp, stack rack and DC adapter. For the cleaning and disinfection of other reusable accessories, refer to their instructions for use.

14.1 Care and Cleaning Safety Information

WARNING

- **Use only the approved cleaners, disinfectants and methods listed in this chapter to clean and disinfect your equipment and accessories. Warranty does not cover damage caused by unapproved substances or methods.**
- **Do not mix disinfecting solutions, as hazardous gases may result.**
- **We make no claims regarding the efficacy of the listed chemicals or methods as a means for controlling infection. For the method to control infection, consult your hospital's infection control officer or epidemiologist.**
- **Be sure to turn off the system and disconnect all power cables before cleaning the equipment.**
- **The responsible hospital or institution shall carry out all cleaning and disinfection procedures specified in this chapter.**

CAUTION

- **Turn off the equipment and remove the power cord from the equipment before cleaning and disinfecting.**
- **Never immerse any part of the equipment or accessories in liquids or allow liquid to enter the interior of the equipment or accessories.**
- **Any contact of cleaners or disinfectants with connectors or metal parts may cause corrosion.**
- **Do not pour or spray any liquid directly on the equipment or accessories or permit fluid to seep into connections or openings.**
- **If you spill liquid on the equipment or accessories, disconnect the power supply, dry the equipment, and contact your service personnel.**
- **Never use abrasive materials (such as steel wool or silver polish), or erosive cleaners (such as acetone or acetone-based cleaners).**

- **Dilute and use the cleaners or disinfectants according to the manufacturer's instructions.**
- **Check the equipment after cleaning and disinfecting. If there is any sign of damage, remove it from use.**

14.2 Cleaning the Equipment

Clean the equipment on a regular basis. Before cleaning, consult your hospital's regulations.

To clean the equipment, follow this procedure:

1. Dampen a soft lint-free cloth with water or ethanol (70%).
2. Wring excess liquid from the cloth.
3. Wipe the display screen of the equipment.
4. Wipe the external surface of the equipment with the damp cloth, avoiding the connectors and metal parts.
5. Dry the surface with a clean cloth. Allow the equipment air dry in a ventilated and cool place.

CAUTION

- **Any contact of cleaners or disinfectants with connectors or metal parts may cause corrosion.**

14.3 Disinfecting the Equipment

Disinfect the equipment as required in your hospital's servicing schedule. Cleaning the equipment before disinfecting is recommended. Always dilute and use disinfectants according to the manufacturer's instructions. The following table lists approved disinfectants:

Product Name	Product Type	Manufacturer
Alpet® D2 Surface Sanitizing Wipes	Wipes	BEST SANITIZERS INC™.
CIDEX® OPA	Liquid	Gilag GmbH International Advanced Sterilization products
Clorox Dispatch® Hospital Cleaner Disinfectant Towels with Bleach	Wipes	Clorox professional products company

Product Name	Product Type	Manufacturer
Clorox Healthcare® Bleach Germicidal Wipes	Wipes	Clorox professional products company
Clorox Healthcare® Hydrogen Peroxide Cleaner Disinfectant Wipes	Wipes	Clorox professional products company
Diversey Oxivir® TB Wipes	Wipes	Diversey Inc
Metrex CaviCide1™	Liquid, spray	METERX® RESEARCH
Metrex CaviWipes™	Wipes	METERX® RESEARCH
PDI Sani-Cloth® AF3 Germicidal Disposable Wipe	Wipes	PDI Inc.
PDI Sani-Cloth® Bleach Germicidal Disposable Wipe	Wipes	PDI Inc.
PDI Sani-Cloth® HB Germicidal Disposable Wipe	Wipes	PDI Inc.
PDI Sani-Cloth® Plus Germicidal Disposable Cloth	Wipes	PDI Inc.
PDI Super Sani-Cloth® Germicidal Disposable Wipe	Wipes	PDI Inc.
VIRAGUARD® Hospital Surface Disinfectant Towelettle	Wipes	VERIDIEN corporation
Virex® II 256 (1:256)	Liquid	Diversey Inc
Virex® TB	Liquid, spray	Diversey Inc
JIAN ZHI SU Disinfectant Tablets	Tablet	Beijing ChangJiangMai Medical Science Technology Co. Ltd
JIAN ZHI SU Surface Disinfectant Spray	Liquid, spray	Beijing ChangJiangMai Medical Science Technology Co. Ltd
JIAN ZHI SU Disinfectant, Double-chain Quaternary Ammonium	Liquid	Beijing ChangJiangMai Medical Science Technology Co. Ltd
DIAN'ERKANG Surface Wipes	Wipes	Shanghai Likang Disinfectant Hi-Tech Co., Ltd

Product Name	Product Type	Manufacturer
DIAN'ERKANG Surface Disinfectant	Liquid	Shanghai Likang Disinfectant Hi-Tech Co., Ltd
DIAN'ERKANG Disinfectant Spray	Liquid, spray	Shanghai Likang Disinfectant Hi-Tech Co., Ltd
Clinell® Universal Wipes	Wipes	GAMA Healthcare Ltd
Clinell ® Sporicidal Wipes	Wipes	GAMA Healthcare Ltd
Tristel Duo™	Liquid, foam	Tristel solutions Limited
Tristel Jet	Liquid, spray	Tristel solutions Limited
Tristel Fuse For Surfaces, 196ppm	Liquid	Tristel solutions Limited
Surfanios Premium, 0.25%	Liquid	ANIOS LABORATORIES
Surfa 'safe	Liquid, spray	ANIOS LABORATORIES
Wip' Anios premium	Wipes	ANIOS LABORATORIES
Aniosurf ND premium, 0.25%	Liquid	ANIOS LABORATORIES
Mikrobac® Tissues	Wipes	BODE Chemie GmbH
Cleanisept® Wipes	Wipes	Dr. Schumacher GmbH
mikrozid® PAA Wipes	Wipes	Schülke & Mayr GmbH
mikrozid® Sensitive Wipes	Wipes	Schülke & Mayr GmbH
Ecolab Incidin® OxyWipes	Wipes	Ecolab Deutschland GmbH
Glutaraldehyde, 2%	Liquid	/
Ethanol, 70%	Liquid	/
Isopropanol, 70%	Liquid	/
Sodium hypochlorite bleach, 0.5%	Liquid	/

Product Name	Product Type	Manufacturer
Hydrogen peroxide, 3%	Liquid	/
Rely+On™ Virkon® High Level surface Disinfectant, 1%	Powder	Antec International Ltd
1-Propanol, 50%	Liquid	/
Descosept® forte	Liquid	Dr. Schumacher GmbH
Descosept® AF	Liquid	Dr. Schumacher GmbH
Dismozon® plus, 0.4%	Powder	BODE Chemie GmbH
mikrozid® AF Wipes	Wipes	Schülke & Mayr GmbH
Terralin® Liquid	Liquid	Schülke & Mayr GmbH
Perform® Classic Concentrate OXY, 0.5%	Powder	Schülke & Mayr GmbH

14.4 Cleaning the Pole Clamp, Stack Rack and DC Adapter

Clean the pole clamp, stack rack and DC adapter on a regular basis. To clean the pole clamp, stack rack and DC adapter, follow this procedure:

1. Clean the pole clamp, stack rack and DC adapter with a soft cloth moistened with water or ethanol (70%).
2. Wipe off the cleaner residue with a dry cloth.
3. Allow the pole clamp.stack rack and DC adapter to air dry.

14.5 Disinfecting the Pole Clamp, Stack Rack and DC Adapter

We recommend that the pole clamp, stack rack and DC adapter should be disinfected only when necessary as determined by your hospital's policy.

Cleaning the accessories before disinfecting is recommended.

Product Name	Product Type	Manufacturer
Isopropanol, 70%	Liquid	/

Product Name	Product Type	Manufacturer
Hydrogen peroxide, 3%	Liquid	/
Perform® Classic Concentrate OXY, 0.5%	Powder	Schülke & Mayr GmbH
Dismozon® plus, 0.4%	Powder	BODE Chemie GmbH
Descosept® AF	Liquid	Dr. Schumacher GmbH
Descosept® forte	Liquid	Dr. Schumacher GmbH
mikrozid® AF Wipes	Wipes	Schülke & Mayr GmbH
Rely+On™ Virkon® High Level surface Disinfectant, 1%	Powder	Antec International Ltd
Terralin® Liquid	Liquid	Schülke & Mayr GmbH

CAUTION

- **To avoid long term damage, the accessories should be disinfected only when necessary as determined by your hospital's policy.**

14.6 Sterilization

Sterilization is not recommended for this equipment, related products, accessories, or supplies unless otherwise indicated in the Instructions for Use that accompany the products, accessories or supplies.

14.7 Impact of Improper Cleaning

Using cleaners other than those recommended may have the following impact:

- Product discoloration
- Metal part corrosion
- Brittle and breaking wires, connectors, and equipment housing
- Reduced cable and leadwire life
- Overall system performance degradation
- Equipment malfunction or failure

15 Accessories

The accessories listed in this chapter comply with the requirements of IEC 60601-1-2 when in use with the equipment. For details about the accessories, refer to the instructions for use provided with the accessory.

WARNING

- **Use accessories specified in this chapter. Using other accessories may cause damage to the equipment or not meet the claimed specifications.**
- **The accessories listed in this chapter must be used with the equipment. The operator shall read the manual of the equipment (including accessories) or contact us before use, to confirm whether the accessories match with the equipment. Otherwise, this may cause patient injury.**

CAUTION

- **The accessories may not meet the performance specifications if stored or used outside the specified temperature and humidity ranges. If accessory performance is degraded due to aging or environmental conditions, contact your service personnel.**
- **Check the accessories and their packages for any sign of damage. Do not use them if any damage is detected.**
- **Check the compatibility of the equipment, cables and accessories before use. Incompatible accessories may degrade the performance of the equipment or cause damage to the equipment.**
- **Use the accessories before the expiry date if their expiry date is indicated.**

NOTE

- **For accessory with a safe service life, see its package for the service life.**

PN	Description
0020-20-12522	Power cord, 10A, 250V, 2.5m, International
009-001075-00	Power cord, 250V, 10A, 3m, Brazil

PN	Description
009-001791-00	Power cord, 250V, 16A, 3m, South Africa
009-002636-00	Power cord, 10A, 1.5m, Australia standard
009-007190-00	Power cord, 3m, India
009-007191-00	Power cord, 1.8m, Switzerland
DA8K-10-14452	Power cord, USA
DA8K-10-14453	Power cord, UK
DA8K-10-14454	Power cord, Europe
009-009837-00	Serial port adapting cable
009-009838-00	Nurse call cable
115-032580-01	Drop sensor
115-070532-00	Stack rack
115-074974-00	Quick install pole clamp
115-074975-00	Standard pole clamp
045-001434-00	Multi-pump bracket
034-001157-00	One channel transport bracket
034-001158-00	Dual channels transport bracket
115-103281-00	DC adapter (single channel)
115-103282-00	DC adapter (dual channels)
023-001550-00	2D barcode reader

A Product Specifications

A.1 Classifications

The equipment is classified, according to IEC60601-1:

Type of protection against electrical shock	CLASS I EQUIPMENT, equipment energized from an internal electrical power source.
Degree of protection against electrical shock	Defibrillation-proof type CF applied part (direct cardiac application)
Mode of operation	Continuous
Degree of protection against harmful ingress of water	IP33
Degree of safety of application in the presence of flammable anesthetic mixture with air or with oxygen or nitrous oxide	The equipment is not suitable for use in the presence of a flammable anesthetic mixture with air or with oxygen or nitrous oxide
Degree of mobility	Portable

A.2 Environmental Specifications

Item	Temperature (°C)	Relative humidity (noncondensing)	Barometric (kPa)
Operating conditions	5 to 40	15% to 95%	57.0 to 107.4
Short-time operating conditions (within 30 minutes)	5 to 50	15% to 95%	57.0 to 107.4
Storage conditions	–30 to 70	10% to 95%	16.0 to 107.4
Shock			

Complies with requirements of 6.3.4, EN 1789:2020+A1:2023 /10.1.3, IEC 60601-1-12:2014+AMD1:2020: Peak acceleration: 300m/s^2 (30g) Duration: 11ms Pulse shape: half-sine Number of shocks: 3 shocks per direction per axis (18 shocks in total) Complies with requirements of 4.7.2, EN 13718-1:2014+A1:2020/RTCA DO-160G Section 7 Category A Pulse shape: terminal saw-tooth Acceleration: 6g Duration: 11ms Number of shocks: 3 shocks per direction per axis (18 shocks in total)
Vibration
Complies with requirements of 6.3.4, EN 1789:2020+A1:2023/10.1.3, IEC 60601-1-12:2014+AMD1:2020: Acceleration amplitude: 10 Hz to 100 Hz: 5.0 (m/s^2)^2/Hz 100 Hz to 200 Hz: -7 dB per octave 200 Hz to 2 000 Hz: 1.0 (m/s^2)^2/Hz Duration: 30 minutes per perpendicular axis (3 total) Complies with requirements of 4.7.2, EN 13718-1:2014+A1:2020/10.1.4, IEC 60601-1-12:2014+AMD1:2020/RTCA DO-160G Section 8 Category U/U2 for helicopter Curve: F (performance level test) Frequency: 5Hz to 300Hz APSD 5Hz to 40Hz: 0.0063 g^2/Hz,+3 dB/Octave; APSD 40Hz to 200Hz: 0.05 g^2/Hz; APSD 200Hz to 300Hz: 0.05 g^2/Hz, -12 dB/Octave Grms: 3.37 Curve: F1 (endurance level test) Frequency: 5Hz to 300Hz APSD 5Hz to 40Hz: 0.0126 g^2/Hz,+3 dB/Octave APSD 40Hz to 200Hz: 0.1 g^2/Hz APSD 200Hz to 300Hz: 0.1 g^2/Hz, -12 dB/Octave; Grms: 4.76 Duration: performance level test for minimum of 10 minutes at the beginning and end of the test, endurance level test for 3 hours (repeated per axis)
Bump
Complies with requirements of IEC 60068-2-27:2008: Peak acceleration: 15 g Pulse duration: 6 ms Number of bumps: 1000 Direction: vertical, with the medical device in its normal operating position(s)

Free fall
Complies with requirements of IEC 60068-2-31:2008: Height of fall: 0.75 m Number of falls: 1 on each of the six surfaces
IP Code
Complies with requirements of IEC 60529:2013, IP33

Storage Conditions: Corrosive-free and ventilated

WARNING

- **The pump may not meet the performance specifications if stored or used outside the specified temperature and humidity ranges. If the performance of the equipment is degraded due to aging or environmental conditions, contact your service personnel.**
- **The equipment is operated in normal use for at most 30 minutes when placed beyond the defined operating conditions, and the maximum environmental temperature should not exceed 50°C. When the environmental temperature is below 5°C, keep the equipment, line and liquid warm, to avoid freezing due to low environmental temperature. When stored under temperature conditions beyond the defined operating conditions, the equipment needs to be placed under room temperature at least one hour before use.**

A.3 Power Supply Specifications

A.3.1 External Power Supply Specifications

Item	Input Voltage	Frequency	Input Current
AC power supply	100 VAC-240 VAC	50/60 Hz	0.5A - 0.21A
DC power supply	10 VDC - 16 VDC	/	3A -1.88A
Dual-channel DC adapter	10 VDC -16 VDC	/	6A Max
Single-channel DC adapter	10 VDC -16 VDC	/	4A Max

A.3.2 Battery

Battery Type	Rechargeable lithium-ion
Run time	At least 11 hours for smart battery and at least 5 hours for standard battery (operating at a rate of 5ml/h or 25ml/h, under standard operating conditions*) At least 2.5 hours for smart battery and at least one hour for standard battery (operating at a rate of 2300ml/h, under standard operating conditions*)
Charge time	⩽ 20 hours for smart and standard battery (operating at a rate of 25 ml/h, charged by the Dock); ⩽ 6 hours for smart battery and ⩽ 5 hours for standard battery (the pump is off, and charged by the AC power supply).
Shutdown delay	At least 30 minutes after first low battery alarm (operating at a rate of 25ml/h, under standard operating conditions*)
*Operating with a fully charged new battery at 20°C ± 2°C, screen brightness configured to 2, default volume, Wi-Fi disabled, drop sensor disconnected.	

A.4 Physical Specifications

Item	Maximum Weight (kg)	W × D × H (mm)	Remark
Main Unit	⩽ 1.85	⩽ 210x 140 x73	with battery, without accessories

A.5 Hardware Specifications

A.5.1 Displays

Type	Size (diagonal)	Resolution
Color TFT LCD	7 inches	⩾ 150x800 pixels

A.5.2 LEDs

Alarm lamp	1 (two color coded: yellow and red)
External power LED	1 (green)
Battery LED	1 (green)

A.5.3 Audio Indicator

Speaker	Gives alarm tones (sound pressure 55 to 70 dB). Supports multi-level tone modulation. Alarm tones comply with IEC 60601-1-8.

A.5.4 Interface Specifications

Power input connector	1
Multi-functional connector	1, RS-232 protocol
USB connector	1, USB 2.0 protocol. Fixed time synchronization pulse specified by the USB protocol.
Drop sensor connector	1

A.5.5 Signal Output Specifications

Multi-functional connector	
Standard	Meets the requirements of IEC 60601-1 for short-circuit protection and leakage current
Nurse Call Signal	
Driving mode	Relay drive
Electric specification	⩽ 60W, ⩽ 2A, ⩽ 36VDC, ⩽ 25VAC
Isolation voltage	>1500VAC
Action mode	Normally open or normally closed (optional)

A.6 Wireless Network

Standards	IEEE 802.11a/b/g/n
Modulation mode	BPSK,QPSK, QAM
Operating frequency	2412MHz to 2472MHz 5180MHz to 5320MHz 5500MHz to 5700MHz 5745MHz to 5825MHz
Data rate	IEEE 802.11a: 6 to 54 Mbps IEEE 802.11b: 1 to 11 Mbps IEEE 802.11g: 6 to 54 Mbps IEEE 802.11n: MCS0 to MCS7

Transfer power	< 20 dBm (CE requirement: detection mode – RMS) < 30 dBm (FCC requirement: detection mode – PEAK)
Operating mode	Transmitting data through the wireless access point (AP)
Data security	Standard: WPA-PSK and WPA2-PSK EAP method: TTLS, TLS, PEAP-MSCHAPV2 Encryption: TKIP and AES
System capacity	Number of the pumps supported by a single AP: ⩽ 16
Data transmission delay between the pump and the CMS	Total data transmission delay time between the pump and the CMS is ⩽ 8s
Interruption number and time between the pump and the CMS	Total interruption duration ⩽ 0.01* total communication time (Test within 24 hours, with 16 pumps, in which three pumps are roaming for 30 times)
Delay time of network disconnection alarm	⩽ 14 s

A.7 Infusion Specifications

Accuracy	Infusion accuracy: ⩽ ±5%(use SHINVA ANDE single use infusion set for pump) Infusion accuracy: ⩽ ±4.5% (use B. Braun Intrafix Primeline) Bolus accuracy: ⩽ ±5% or ±0.02ml, whichever is greater Drip accuracy: ⩽ ±10% **Note:**Test in accordance with IEC60601-2-24:2012 **Note:** Ensure the vertical distance between the liquid surface in infusion bag and the pump is within 51 ± 5 cm (20 ± 2 in.).
Set range of the infusion rate/ purge rate/bolus rate	Range of rate: 0.10ml/h to 2300ml/h (0.10 ml/h to 2000 ml/h for blood transfusion) Increment: 0.01ml/h (0.10 to 99.99ml/h) 0.1ml/h (100.0 to 999.9ml/h) 1ml/h(1000 to 2300ml/h)

Occlusion pressure	15 levels selectable: (50, 150, 225, 300, 375, 450, 525, 600, 675, 750, 825, 900, 975, 1050, 1125)mmHg Tolerance: ≤ ±75mmHg (for 50mmHg level, and operating at a rate ≤ 100 ml/h) ≤ ±20% or ±125mmHg, whichever is greater (for other pressure levels) The maximum occlusion pressure is 1350mmHg.
Bubble size	6 levels selectable: 15μl, 50μl, 100μl, 250μl, 500μl, 800μl Minimum detectable bubble size: 15μl
Maximum volume (under single fault conditions)	≤ 0.5ml
KVO rate	0.1 to 50ml/h Minimum increment: 0.01ml/h
Time set range	00:00:01 to 99:59:59
VTBI set range	0.10 to 9999.99 ml Increment: 0.01ml
Weight set range	0.1 to 499.0 kg/0.2 to1100.1 lb Increment: 0.1kg/0.1lb (Patient Management screen and Dose mode: 0.001kg/0.001lb)
Drug Amt. set range	0.001 to 99999
Drug Amt. unit set range	ng, μg or mcg, mg, g, mU, U, kU, EU, mmol, mol, mcal, cal, kcal, mEq
Volume set range in Dose Time Mode/Dose Mode	0.10 to 9999.99ml
Conc. set range	0.001 to 9999.99
Conc. unit set range	ng/ml, μg/ml or mcg/ml, mg/ml, g/ml, mU/ml, U/ml, kU/ml, EU/ml, mmol/ml, mol/ml, mcal/ml, cal/ml, kcal/ml, mEq/ml
Dose Rate set range	0.001 to 99999

WARNING

- **The infusion accuracy and occlusion pressure detection are affected by viscosity of liquids and IV sets used (e.g. model, tubing diameter, material, elasticity and size of the needle, etc.).**

NOTE

- **The infusion accuracy tests and occlusion pressure tests are performed in accordance with IEC60601-2-24:2012 (test temperature: 20°C ± 2°C). If an measuring equipment (such as infusion device analyzer) used for infusion accuracy test does not meet the requirements of IEC60601-2-24:2012, the test error of the measuring equipment (such as infusion device analyzer) will be added to the actual test results of the pump.**

A.8 Recommended Infusion Sets

Product Name	Type	Manufacturer
Transfusion Sets for Single Use	Transfusion	SHANDONG WEIGAO GROUP MEDICAL POLYMER CO., LTD
Single Use Infusion Set for Pump	Regular	SHINVA ANDE HEALTHCARE APPARATUS CO., LTD
Disposable Enteral Feeding Set	Nutrition	SHINVA ANDE HEALTHCARE APPARATUS CO., LTD
B.Braun Intrafix Primeline	Regular	B. Braun Melsungen AG

NOTE

- **The pump will not affect the quality of disposables from other suppliers. Changes in quality may affect the technical data of the pump. Mindray Scientific is not responsible for such changes.**

A.9 Occlusion Alarm Delay and Bolus Volume

Rate (ml/h)	Occlusion alarm delay time (hh: mm: ss)	
	High occlusion alarm pressure level	Low occlusion alarm pressure level
1	< 01:17:26	< 00:04:37
25	< 00:02:43	< 00:00:14

Rate	Bolus volume after occlusion (ml)	
	High occlusion alarm pressure level	Low occlusion alarm pressure level
25ml/h	< 0.18	< 0.18

Test conditions:

- Infusion set brand: B.Braun Intrafix Primeline
- Anti-bolus: On
- Test temperature: 20℃ ±2℃
- Infusion line length: 1 meter

WARNING

- **Occlusion alarm pressure, alarm delays and bolus volume may vary depending on test conditions, temperature and tube length.**

A.10 Infusion Accuracy Graphs

A.10.1 Infusion Accuracy at 1 ml/h

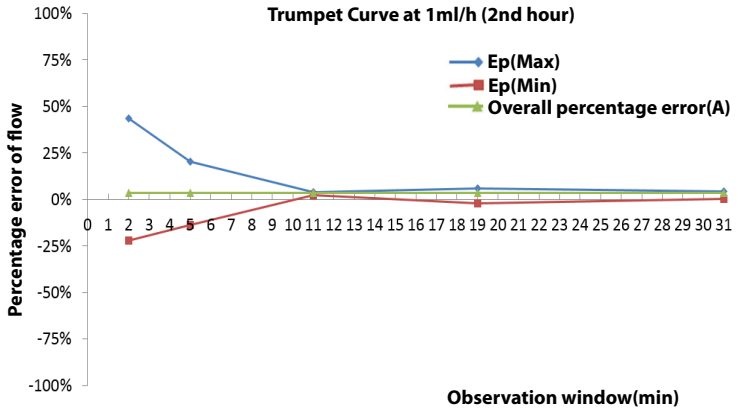

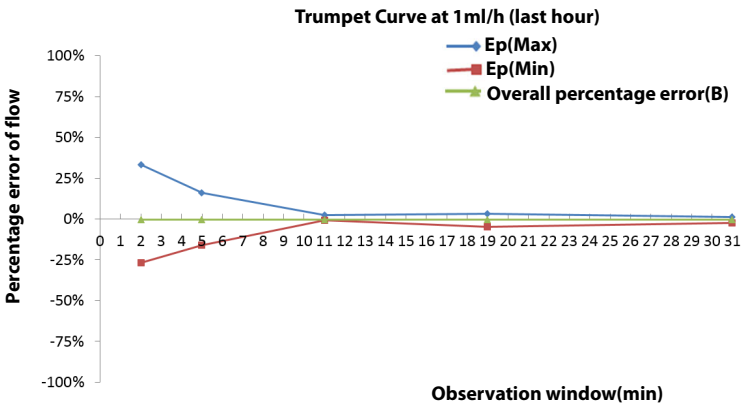
Trumpet Curve at 1ml/h (last hour)
Ep(Max)
Ep(Min)
Overall percentage error(B)
Percentage error of flow
100%
75%
50%
25%
0%
-25%
-50%
-75%
-100%
0 1 2 3 4 5 6 7 8 9 10 11 12 13 14 15 16 17 18 19 20 21 22 23 24 25 26 27 28 29 30 31
Observation window(min)

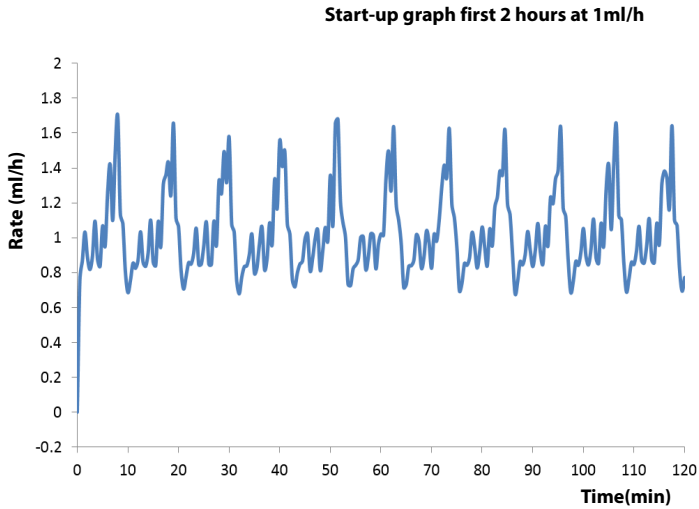
Start-up graph first 2 hours at 1ml/h
Rate (ml/h)
2
1.8
1.6
1.4
1.2
1
0.8
0.6
0.4
0.2
0
-0.2
0 10 20 30 40 50 60 70 80 90 100 110 120
Time(min)

A.10.2 Infusion Accuracy at 25ml/h

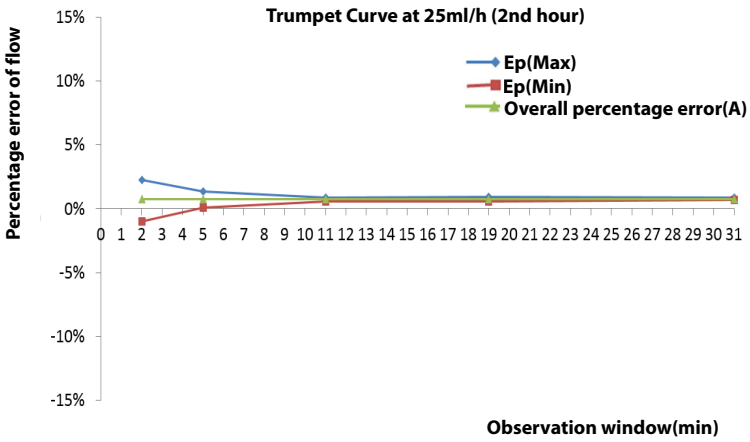

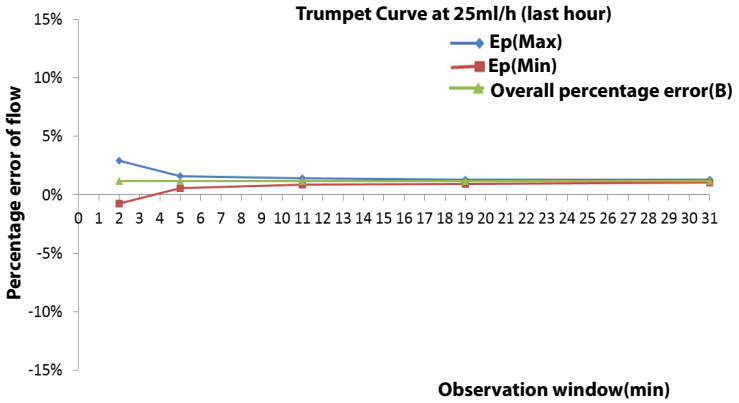

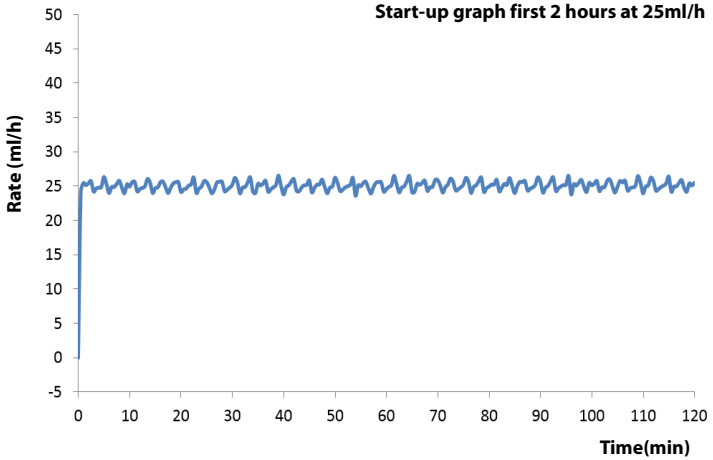

Test conditions:

- Infusion set brand: B.Braun Intrafix Primeline
- Test interval: △ t =0.5 minute
- Sampling quantity of pump: 3
- Sampling quantity of infusion set: 3

WARNING

- **Infusion accuracy may be influenced by the pump's environment (such as pressure, temperature, humidity, and any infusion consumables used).**

A.11 Operating Environment

Host CPU	MIMXRT1052CVL5B
Primary programming language	C&C++
Operating system	FreeRTOS

B EMC and Radio Regulatory Compliance

B.1 EMC

The device meets the requirements of IEC 60601-1-2: 2020.

WARNING

- **Use of accessories, transducers and cables other than those specified or provided by the manufacturer of this device could result in increased electromagnetic emissions or decreased electromagnetic immunity of this device and result in improper operation.**
- **Use of this device adjacent to or stacked with other device should be avoided because it could result in improper operation. If such use is necessary, this device and the other device should be observed to verify that they are operating normally.**
- **Portable RF communications equipment (including peripherals such as antenna cables and external antennas) should be used no closer than 30 cm (12 inches) to any part of this device, including cables specified by the manufacturer. Otherwise, degradation of the performance of this device could result.**
- **The non-ME EQUIPMENT (e.g. ITE) that is a part of an ME SYSTEM may be disrupted by the electromagnetic interference of nearby equipment. It may be necessary to take mitigation measures, such as re-orienting or relocating the non-ME EQUIPMENT or shielding the location.**
- **This device is intended for use in professional healthcare facility environment only. If it is used in special environment, such as magnetic resonance imaging environment, the device may be disrupted by the operation of nearby equipment.**

Table EMC-1

Guidance and Declaration - Electromagnetic Emissions		
The device is intended for use in the electromagnetic environment specified below. The customer or the user of the device should assure that it is used in such an environment.		
Emission test	**Compliance**	**Electromagnetic environment - guidance**
RF Emissions CISPR 11	Group 1	The device uses RF energy only for its internal function. Therefore, its RF emissions are very low and are not likely to cause any interference in nearby electronic device.
RF emissions CISPR 11 (Equipped with dedicated transfer device)	Class B	The device is suitable for use in all establishments, including domestic establishments and those directly connected to the public low-voltage power supply network that supplies buildings used for domestic purposes.
RF emissions CISPR 11 (No dedicated transfer device configured)	Class A	
Harmonic distortion IEC 61000-3-2	Class A	
Voltage fluctuations and flicker IEC 61000-3-3	Complies	

NOTE

- **The device needs special precautions regarding EMC and needs to be installed and put into service according to the EMC information provided below.**
- **Use of portable or mobile communications devices will degrade the performance of the device.**
- **Other devices may affect this device even though they meet the requirements of CISPR.**
- **If the essential performance is lost or degraded, it may be necessary to take mitigation measures, such as re-orienting or relocating the ME EQUIPMENT or ME SYSTEM or shielding the location or stopping using the pump system and contact the service personnel.**

If the device is operated within the electromagnetic environment listed in Table **Guidance and Declaration —Electromagnetic Immunity**, the system will remain safe and provide the following essential performance:

- Operating mode
- Accuracy
- Function
- Protection against UNINTENDED BOLUS volumes
- Occlusion
- ALARM CONDITIONS regarded
- Data stored

Table EMC-2

Guidance and Mindray Declaration - Electromagnetic Immunity			
The device is intended for use in the electromagnetic environment specified below. The customer or the user of device should assure that it is used in such an environment.			
Immunity test	**IEC 60601 test level**	**Compliance level**	**Electromagnetic environment - guidance**
Electrostatic discharge (ESD) IEC 61000-4-2	±8 kV contact; ±2 kV, ±4 kV, ±8 kV, ±15 kV air	±8 kV contact; ±2 kV, ±4 kV, ±8 kV, ±15 kV air	Floors should be wood, concrete or ceramic tile. If floors are covered with synthetic material, the relative humidity should be at least 30%.
Electrical fast Transient / burst IEC 61000-4-4	±2 kV for power supply lines ±1 kV for input/ output lines (length greater than 3 m)	±2 kV for power supply lines	Mains power quality should be that of a typical commercial or hospital environment.
Surge IEC 61000-4-5	±0,5 kV, ±1 kV line(s) to line(s); ±0,5 kV, ±1 kV, ±2 kV line(s) to earth	±0,5 kV, ±1 kV line(s) to line(s); ±0,5 kV, ±1 kV, ±2 kV line(s) to earth	
Voltage dips and Voltage interruptions IEC 61000-4-11	0 % U_T; 0,5 cycle At 0°, 45°, 90°, 135°, 180°, 225°, 270° and 315° 0 % U_T for 1 cycle and 70 % U_T for 25/ 30 cycles 0 % U_T for 250/300 cycle	0 % U_T; 0,5 cycle At 0°, 45°, 90°, 135°, 180°, 225°, 270° and 315° 0 % U_T for 1 cycle and 70 % U_T for 25/ 30 cycles 0 % U_T for 250/300 cycle	Mains power quality should be that of a typical commercial or hospital environment. If the user of our product requires continued operation during power mains interruptions, it is recommended that our product be powered from an uninterruptible power supply or a battery.
RATED power frequency magnetic fields IEC 61000-4-8	30 A/m 50 Hz / 60 Hz	30 A/m 50 Hz / 60 Hz	Power frequency magnetic fields should be at levels characteristic of a typical location in a typical commercial or hospital environment.
Note: U_T is the A.C. mains voltage prior to application of the test level.			

Table EMC-3

Guidance and Declaration - Electromagnetic Immunity			
The device is intended for use in the specified electromagnetic environment. The customer or the user of the device should assure that it is used in such an environment as described below.			
Immunity test	**IEC 60601 test level**	**Compliance level**	**Electromagnetic environment - guidance**
Conducted disturbances induced by RF fields IEC61000-4-6	3 Vrms 150 kHz to 80 MHz	3 Vrms	Portable and mobile RF communications equipment should be used no closer to any part of the device, including cables, than the recommended separation distance calculated from the equation applicable to the frequency of the transmitter. Recommended separation distance: $d = 1.2\sqrt{P}$ 150kHz to 80 MHz $d = 2\sqrt{P}$ 150kHz to 80 MHz $d = 1.2\sqrt{P}$ 80 MHz to 800 MHz $d = 2.3\sqrt{P}$ 800 MHz to 2.7 GHz where P is the maximum output power rating of the transmitter in watts (W) according to the transmitter manufacturer and d is the recommended separation distance in meters (m). Field strengths from fixed RF transmitters, as determined by an electromagnetic site survey[b], should be less than the compliance level in each frequency range[c]. Interference may occur in the vicinity of equipment marked with the following symbol:
	6 Vrms in ISM bands[a] between 0,15 MHz and 80 MHz	6 Vrms	
Radiated RF EM fields IEC61000-4-3	10V/m 80 MHz to 2.7 GHz	10V/m	
Note 1: At 80 MHz and 800 MHz, the higher frequency range applies. Note 2: These guidelines may not apply in all situations. Electromagnetic propagation is affected by absorption and reflection from structures, objects and people.			

[a] The ISM (industrial, scientific, and medical) bands between 150 kHz and 80 MHz are 6.765 MHz to 6.795 MHz; 13.553 MHz to 13.567 MHz; 26.957 MHz to 27.283 MHz; and 40.66 MHz to 40.70 MHz. The amateur radio bands between 0,15 MHz and 80 MHz are 1,8 MHz to 2,0 MHz, 3,5 MHz to 4,0 MHz, 5,3 MHz to 5,4 MHz, 7 MHz to 7,3 MHz, 10,1 MHz to 10,15 MHz, 14 MHz to 14,2 MHz, 18,07 MHz to 18,17 MHz, 21,0 MHz to 21,4 MHz, 24,89 MHz to 24,99 MHz, 28,0 MHz to 29,7 MHz and 50,0 MHz to 54,0 MHz.

[b] Field strengths from fixed transmitters, such as base stations for radio (cellular/cordless) telephones and land mobile radios, amateur radio, AM and FM radio broadcast and TV broadcast cannot be predicted theoretically with accuracy. To assess the electromagnetic environment due to fixed RF transmitters, an electromagnetic site survey should be considered. If the measured field strength in the location in which the device is used exceeds the applicable RF compliance level above, the device should be observed to verify normal operation. If abnormal performance is observed, additional measures may be necessary, such as re-orienting or relocating the device.

[c] Over the frequency ranges 150 kHz to 80 MHz, field strengths should be less than 3V/m.

Table EMC-4

Guidance and Mindray Declaration - Electromagnetic Immunity			
The device is intended for use in the electromagnetic environment specified below. The customer or the user of device should assure that it is used in such an environment.			
Immunity test	**IEC 60601 test level**	**Compliance level**	**Electromagnetic environment - guidance**
Proximity magnetic fields IEC 61000-4-39	8 A/m 30 kHz CW	8 A/m 30 kHz CW	/
	65 A/m 134,4 kHz Pulse modulation 2,1 kHz	65 A/m 134,4 kHz Pulse modulation 2,1 kHz	
	7,5 A/m 13,56 MHz Pulse modulation 50 kHz	7,5 A/m 13,56 MHz Pulse modulation 50 kHz	

Table EMC-5 Test specifications and minimum distances

Recommended Separation Distances between Portable and Mobile RF Communications Equipment and the Device						
The device is intended for use in an electromagnetic environment in which radiated RF disturbances are controlled. The customer or the user of the device can help prevent electromagnetic interference by maintaining a minimum distance between portable and mobile RF communications equipment (transmitters) and the device as recommended below, according to the maximum output power of the communications equipment. Portable and mobile radio communications equipment (e.g. two-way radio, cellular/ cordless telephones and similar equipment) should be used no closer to any part of this device, including cables, than determined according to the following method:						
Test frequency (MHz)	**Band (MHz)**	**Service**	**Modulation**	**Maximum power (W)**	**Distance (m)**	**Immunity test level (V/m)**
385	380 - 390	TETRA 400	Pulse modulation 18Hz	1.8	0.3	27
450	430 - 470	GMRS 460 FRS 460	Pulse modulation 18Hz	2	0.3	28
710	704 - 787	LTE Band 13,17	Pulse modulation 217 Hz	0.2	0.3	9
745						
780						
810	800 - 960	GSM 800/ 900, tetra 800, iDEN 820, CDMA 850, LTE Band 5	Pulse modulation 18 Hz	2	0.3	28
870						
930						

1720	1700 - 1990	GSM 1800, CDMA 1900, GSM 1900, DECT, LTE Band 1, 3, 4, 25, UMTS	Pulse modulation 217 Hz	2	0.3	28
1845						
1970						
2450	2400 - 2570	Bluetooth, WLAN, 802.11 b/g/n, RFID 2450, LTE Band 7	Pulse modulation 217 Hz	2	0.3	28
5240	5100 - 5800	WLAN, 802.11 a/n	Pulse modulation 217 Hz	0.2	0.3	9
5500						
5785						

Table EMC-6

Recommended Separation Distances between Portable and Mobile RF Communications Equipment and the Device				
The device is intended for use in an electromagnetic environment in which radiated RF disturbance are controlled. The customer or the user of device can help prevent electromagnetic interference by maintaining a minimum distance between portable and mobile RF communication equipment (transmitters) and device as recommended below, according to the maximum output power of the communication equipment.				
Rated Maximum Output Power of Transmitter Watts (W)	**Separation Distance According to Frequency of Transmitter**			
	150 kHz to 80 MHz Out ISM and amateur radio bands $d = 1.2\sqrt{P}$	150 kHz to 80 MHz in ISM and amateur radio bands $d = 2\sqrt{P}$	80 MHz to 800 MHz $d = 1.2\sqrt{P}$	800 MHz to 2.7 GHz $d = 2.3\sqrt{P}$
0.01	0.12	0.2	0.12	0.23
0.1	0.38	0.64	0.38	0.73
1	1.2	2	1.2	2.3
10	3.8	6.4	3.8	7.3
100	12	20	12	23
For transmitters at a maximum output power not listed above, the recommended separation distanced in meters (m) can be determined using the equation applicable to the frequency of the transmitter, where P is the maximum output power rating of the transmitter in watts (W) according to the transmitter manufacturer. Note 1: At 80 MHz and 800 MHz, the higher frequency range applies. Note 2: These guidelines may not apply in all situations. Electromagnetic propagation is affected by absorption and reflection from structures, objects and people.				

Cable information:

PORT No.	Name	Cable Length (m)	Cable Shielded (Y/N)	Remark
1	Power cord	2.5	N	/
2	Nurse call cable	2.8	N	/
3	DC adapter (single channel)	2.8	N	/
4	DC adapter (dual channels)	2.8	N	/
5	Serial port adapting cable	2.8	N	/
6	Drop sensor cable	1.5	N	/

B.2 Radio Regulatory Compliance

Refer to *A.6 Wireless Network* for the details of RF parameters.

The radio device used in this product is in compliance with the essential requirements and other relevant provisions of Directive 2014/53/EU.

WARNING

- **Keep a distance of at least 20cm away from the equipment when Wi-Fi function is in use.**

C Abbreviations

Abbreviation	In Full
AC	Alternating Current
Anti-Bolus	Anti-Bolus
BOLUS	Bolus
CCU(CICU)	Cardiac Intensive Care Unit
CE	Conformité Européenne
CISPR	International Special Committee on Radio Interference
CPU	Central Processing Unit
DC	Direct Current
DERS	Dose Error Reduction Systems
DPS	Dynamic Pressure System
EEC	European Economic Community
EMC	Electromagnetic Compatibility
EMI	Electromagnetic Interference
EtO	Ethylene oxide
ICU	Intensive Care Unit
ID	Identification
IEC	International Electrotechnical Commission

Abbreviation	In Full
IEEE	Institute of Electrical and Electronic Engineers
ISO	International Organization for Standardization
IV	Intravenous
KVO	Keep Vein Open
LED	Light Emitting Diode
Max	Maximum
MDD	Medical Device Directive
Min	Minimum
MRI	Magnetic Resonance Imaging
N/A	Not Applied
OR	Operating Room
SN	Series Number
USB	Universal Serial Bus
VTBI	Volume To Be Infused

D Control Software Use Guide

D.1 Safety Information

This section describes the basic safety information that users of the control software (hereinafter referred to as the software) should pay attention to and abide by.

D.1.1 Warnings

WARNING

- **The alarms and other information displayed on the software are for clinician's reference only and cannot be directly used as the basis for clinical treatment. Before giving invasive treatment to a patient, check the corresponding devices to confirm the results that have been obtained from the software.**
- **If any data displayed on the software screen is abnormal or questionable, first check the patient's vital signs by alternative means and then verify that the software and the devices connected to the software are working properly.**
- **The software is a clinical information device. Except for using such components as the mouse, touchscreen and keyboard to perform normal operations, do not touch or disassemble any other component, especially the power component; otherwise, it may result in personnel injury.**
- **The computer running the software must comply with local relevant regulations.**
- **Data communication must be performed within a closed network or within a virtually isolated network provided by a hospital for all network functions.**
- **The alarms and other information displayed on the software come from connected devices. If network connection fails, data transmitted from the devices to the software might be lost or delayed. Thus keep patients under close surveillance.**
- **Before connecting any storage device to the software, ensure that this storage device is free of viruses.**

D.1.2 Cautions

CAUTION

- **The service life of the software depends on its hardware. Rough treatment, dropping or collision should be avoided in the operation on the keyboard, mouse and computer case; otherwise, the service life of the software may be shortened.**
- **The packaging of the software may be contaminated by microorganisms during transport, storage and use. The packaging should be inspected for damage before removal. In case of any damage, contact the carrier or Mindray immediately.**
- **Hospitals without an emergency power system should use an Uninterruptible Power Supply (UPS) to power the computer installed with the software. Do not force the UPS to turn off. When there is a power failure, the computer and the software should be shut down by following the specified shutdown procedure before the UPS is turned off. If case of a sudden power failure, software error may occur and consequently the software may not work correctly next time or even cause serious damages.**
- **Do not activate or transfer the software outside the conditions specified in this manual. Failure to do so may result in software error. The manufacturer is not liable for the consequential damages.**
- **Restart the software every three months. Long time operation of the software may lead to a failure of the operating system.**
- **The software should be installed only by using Mindray provided Microsoft Windows operating system, service packs, and patches. Use of unauthorized software may lead to abnormal operation or software errors.**
- **To sustain network security and network connection stability, make sure the software and the bedside devices communicate within a closed LAN network which forbids access to the Internet and other external networks. Physical environment or firewalls can be used for isolation. When firewalls are used, make sure that configurations are made to forbid all the unexpected access to the software and bedside devices.**
- **For host computers installing MacAfee Application Control software, all the necessary software should be authorized through MacAfee. Unauthorized software can not run in the host computer.**
- **To avoid risk of electric shock, the computer installed with the software must only be connected to mains power with protective earth.**
- **When disposing of the packaging material, be sure to observe the local waste control regulations or your hospital protocols.**

D.2 Overview

Connected to an infusion pump via network, the software can retrieve and display the information of the pump as well as remotely control the pump.

Release version of the software: 01

WARNING

- **The software must be used by experienced clinical professionals who have received adequate training in its use. Account credentials, passwords and device authorization codes are required to modify control settings. Anyone unauthorized or untrained must not perform any operation on the software.**
- **The software shall be used along with pumps from Mindray.**

D.2.1 Interface

Application programming interface: None

Data interface: The software controls the infusion pump based on the MD2 Mindray private protocol.

Date Interface	Protocol
Wireless interface	MD2 Mindray private protocol

D.2.2 Access Control

Account and password are required to access the software.

The software has an access control feature which prohibits users without permission from logging in. Users should log in to the software with the user name and password.

User	Permission	Access method
Clinical professionals	Browse the real-time parameters and settings of the infusion pump through the software	Access the software directly.
	Modify the infusion setting of the infusion pump through the software	User name and password are required.
Maintenance personnel	Modify the settings of the software	Maintenance password is required.

D.2.3 Software and Hardware Requirements

The software must be used with BeneFusion nVP, BeneFusion nVP ex, BeneFusion nVP Neo, BeneFusion eVP, BeneFusion eVP ex, and BeneFusion eVP Neo infusion pumps and BeneFusion system software (V02) produced by Mindray.

D.2.4 User Error Prevention

Password confirmation is required to exit the software.

Alarms will be triggered if users change the software network settings. The modified network settings take effect only after the software is restarted.

D.2.5 Specifications

The software specifications are as follows:

- Data transmission delay time between the pump and the software is ⩽ 6s
- When the control software is connected to the infusion pump, only one pump can be controlled.

The software can remotely control the infusion pump.

- Supported configurations involve setting infusion modes (including rate mode, time mode, micro-infusion mode, drip mode, dose mode, dose time mode and ramp mode), managing secondary infusion, setting infusion parameters (including Rate, Time, VTBI, Rate-Sec., Time-Sec., VTBI-Sec., Rate-Pri., Time-Pri., VTBI-Pri., BolusVTBI, Bolus Dose and dose unit, BolusRate, BolusTime, Dose Rate and Dose Rate Unit, drug concentration and its unit, drug volume & diluent volume and their units, Weight, Body Surface Area, Total Time, Up Time, Down Time, KVO Rate, occlusion pressure levels), setting relay infusion, starting infusion, titration, setting bolus for primary and secondary infusions, stopping infusion, entering standby mode, resetting low-priority alarms, pausing alarm sound, clearing Past 24h Total, setting bubble size limit and accumulated air limit as well as Secondary Callback.
- The information that can be displayed involves patient symbol, bed number, department, name, prompts, battery symbol, battery charge, system time, night mode symbol, activation status symbol, customized relay symbol, circular relay symbol, infusion modes (including rate mode, time mode, micro-infusion mode, drip mode, dose mode, dose time mode and ramp mode), infusion parameters (including drug name, brand and specification, Rate, Time, VTBI, Rate-Sec., Time-Sec., VTBI-Sec., Rate-Pri., Time-Pri., VTBI-Pri., Volume, BolusVTBI, Bolus Dose and dose unit, BolusRate, BolusTime, current occlusion pressure, occlusion pressure levels, Dose Rate and Dose Rate Unit, drug concentration and its unit, drug volume & diluent volume and their units, Weight, Body Surface Area, Total Time, Up VTBI / Down VTBI / Steady VTBI, Up Time/Down Time /Steady Time, Up Rate/Down Rate/ Steady Rate), KVO Time, Past 24h Total, alarms and standby status.
- Infusion parameters of the pump can be set on the software, and the response time of the pump is no longer than 1s.

- The software receives data sent from the pump via the network. If the software does not receive data within 6s, the software reports a network error and prompts the user to check the network connection.
- Network connection: The pump is connected to the software via wireless network.
- Network protocol: The software controls the pump based on the MD2 Mindray private protocol.

D.3 Equipment Preparation

D.3.1 Equipment Preparation Safety Information

CAUTION

- **The software should be installed, maintained and upgraded by authorized Mindray personnel. If the software needs to be relocated to a different computer, contact your service personnel. The manufacturer is not liable for the damages resulting from unauthorized installation or relocation of the software.**

NOTE

- **Never place the software within a patient environment.**
- **Do not block the displays of the software.**
- **Put the software in a location where you can easily view and operate the equipment.**

D.3.2 Installation

D.3.2.1 Configuration Requirements

The computer installed with the software should be highly reliable and stable. It should be ensured that the hardware configuration can support the effective operation of the software. The computer shall meet the following requirements:

Item	Description
Operating system	Windows 10 or compatible version
CPU	four cores or above
Memory	8GB or above
Hard disk	250GB or above
Network adapter	100M,self-adapting, Ethernet 802.3
Anti-virus software	McAfee Application Control software

D.3.2.2 Installing the Software

To install the software, follow this procedure:

1. Find and get the installation package from the USB drive.
2. Run RemoteControlSystemSetup.exe.
3. Select installation language → Select **OK**. Install the software following the screen prompts.

After installation is finished, the software will install automatically.

D.3.2.3 Installing the License

License is required for the software to work normally. Contact maintenance personnel for the license.

After installing the software and getting the license, follow this procedure to import the license:

1. Click the icon on the desktop.
2. Select **Import**.
3. Select the license file → select **OK**.

D.3.3 Starting the Software

Select the icon on the desktop to start the software.

D.3.4 Setting Network Connection

When starting the software for the first time, you need to set the network on the software and the pump:

- For the software: setting the network in the **Bedside Monitoring Network Setup** menu.
- For pumps: setting the network in the **Central Station Setup** menu. Fill in the IP address of the software.

D.3.5 Viewing System Information

Select the system menu in the main screen of the software → select **System Information**.

D.3.6 Closing the Software

To close the software, follow this procedure:

1. Select the system menu in the upper left corner of the screen.
2. From the drop-down list, select **System Setup** → Select **Factory Maintenance** → Enter password → Select **Exit to Windows**.

D.3.7 Uninstallation

D.3.7.1 Uninstalling the Software in the Control Panel of the Computer

In the computer where the software is running, search **Control Panel** → select **Programs** → select **Uninstall Program**. Then, follow this procedure to uninstall the software:

1. Right click with a mouse or select the Mindray Remote Control System program → select **Uninstall**.
2. Select **Uninstall** in the pop-up dialog. The software automatically removes from the computer. The prompt appears when the uninstallation completes. Select **OK**.

D.3.7.2 Uninstalling the Software in the Installation Directory

To uninstall the software, follow this procedure:

1. Run **uninstall.exe** in the installation directory.
2. Select **Uninstall** in the pop-up dialog. The software automatically removes from the computer. The prompt appears when the uninstallation completes. Select **OK**.

D.4 Remote Control

The software supports remotely controlling pumps. Modifications made on the software will synchronize to the corresponding pump. Operations on the software are similar to those performed directly on the pump. Before using the software, read the operator's manual of the corresponding pump.

WARNING

- **Verify that the drug name is correct before starting infusion.**

CAUTION

- **If the pump itself is being operated, other users cannot remotely control it on the software.**
- **Before remotely controlling the pump on the software, set correct location information such as department and bed number.**
- **Use the software and the pump in a fixed location. If you need to relocate the software or move the pump, ask authorized maintenance personnel to reset location information.**

D.4.1 Remotely Controlling the Pump

To remotely control the pump on the software, follow this procedure:

1. On the main screen, select **Pump** on the switching screen area.
2. Select the required pump.
3. Enter user name and password on the pop-up dialog.
4. Enter the device authorization code.

The remote control window on the software simultaneously displays infusion information from the pump's main screen, including infusion mode, infusion parameters, secondary infusion, past 24h total infusion, etc.

D.5 Alarms

D.5.1 Safety Information

WARNING

- **The software only supports displaying visual alarm information, but no audible alarms. Therefore, this software cannot be used as a main alarm device.**
- **A potential risk may exist when remotely resetting alarm, pausing alarm audio or modifying alarm limit for the pump on the software. Read the operator's manual of the pump before you do so.**
- **Alarm log is saved when the software is powered down. Stored alarm logs remain unchanged throughout the power loss period. Earlier alarm logs will be overwritten by later ones if the capacity is reached.**
- **The software loads alarm settings from pumps and will not save alarm settings locally. After an abnormal power shutdown and recovery, the software will reload alarm settings from pumps.**
- **Current ViewBed screen displays only alarm information of the current pump. For alarm information of other pumps, switch to the corresponding ViewBed screen.**

D.5.2 Understanding the Alarms

Alarms are sent from pumps to the software. The software provides visual alarm indications.

The software can display alarms synchronously with pumps. Most of the alarms displayed on the software come from pumps.

D.5.2.1 Alarm Categories

Technical alarms can be classified into three categories: high priority alarms, low priority alarms and prompts.

D.5.2.2 Alarm Priorities

When an alarm occurs, the software gives different visual alarm indications as shown below:

Alarm Indicators	High Priority Alarm	Low Priority Alarm	Prompt
Simulated alarm lamp	Red, flashing frequency 1.4Hz-2.8Hz, duty cycle 20%-60%	Cyan, no flashing, duty cycle 100%	None
Alarm message	White text inside a red box	Black text inside a cyan box	White text
Alarm priority indicators	!!!	!	None

NOTE

- **When multiple alarms of the same priority levels occur simultaneously and are displayed in the same area, all the alarm messages will be scrolled in the display area.**

D.5.2.3 Alarm Status Symbols

The alarm symbols may appear on the ViewBed screen of the software. For detailed explanation of the alarm symbols, see the operator's manual of the corresponding pump.

D.5.3 Viewing Alarms

Select alarm information area on the ViewBed screen to view detailed alarm information of the corresponding pump.

D.5.4 Resetting Alarms

You can reset alarms for pumps on the software. For details, see the operator's manual of the corresponding pump.

D.5.5 Pausing Alarm Sound

You can pause alarm sound for pumps on the software for 120 seconds. For details, see operator's manual of the corresponding pump.

D.6 System Setup

Select the system menu area in the upper left corner of the screen → select **System Setup** to access the System Setup menu. You can set the network, authorize remote control and export logs.

D.7 Maintenance

Regularly maintaining the host computer is essential to the proper functioning of the software. After the software is continuously running for 6 to 12 months, maintained or upgraded, a comprehensive inspection should be carried out by the qualified service personnel to ensure normal functioning of the software.

D.8 Troubleshooting

This section only describes alarms coming from the software. For alarms coming from pumps, see the operator's manuals for description and solutions.

The following table lists alarm messages in the system alarm area at the top of the main screen.

Alarm message	Alarm priority	Cause and solution
Network is disconnected. Please check.	High	Network of this software is disconnected. Check the network connection.
The settings have been changed. Please restart the system.	High	Network related settings are changed. Restart the software to make the changes effective.

The following table lists other problems that might occur when running this software.

Problem	Cause and Solution
The software cannot connect with the pump.	Possible causes might be wrong network configuration, etc. Following solutions are recommended: 1. Check that the network configurations on the software and the pump are correct. 2. Check that the pump supports connecting to the software.

E Declaration of Conformity

Declaration of Conformity-V1.0

Declaration of Conformity CE

Manufacturer:	Shenzhen Mindray Scientific Co., Ltd.
Address	6/F, Bldg 2, 1203 Nanhuan Avenue, Yutang Block, Guangming District, 518106 Shenzhen, P. R. China
EC-Representative:	Shanghai International Holding Corp. GmbH (Europe)
Address	Eiffestraße 80, 20537 Hamburg, Germany
Product:	Infusion pump
Model:	BeneFusion nVP, BeneFusion nVP ex, BeneFusion nVP Neo BeneFusion eVP, BeneFusion eVP ex, BeneFusion eVP Neo

We herewith declare that the products above mentioned meet the provisions of the Council Directive 2014/53/EU concerning radio equipment. All supporting documentation is retained under the premises of the manufacturer.

Standards Applied:

☒ **EN 60601-1:2006+A1:2013+A2:2021**	☒ **EN 60601-1-2:2015/A1:2021**
☒ **EN IEC 62311:2020**	☒ **ETSI EN 301 489-1 V2.2.3**
☒ **301 489-17 V3.2.4**	☒ **ETSI EN 300 328 V2.2.2**
☒ **ETSI EN 301 893 V2.1.1**	☒ **EN IEC 62368-1:2020+A11:2020**

Place, Date of Issue:	Shenzhen,
Signature:	Bai Yanhong 2024.4.15
Name of Authorized Signatory:	Bai Yanhong
Position Held in Company:	Manager, Technical Regulation

This page intentionally left blank.

P/N: 046-029101-00(7.0)